WISSEN
TECHNIK
LEIDENSCHAFT

Simulation and experimental investigation methods for friction-induced vibration in rail vehicle disc brake system

Kaoru Takehama[1,2], Peter Brunnhofer[1,2], Martin Leitner[1,2], Markus Hengsberger[3], Thomas Moshammer[3], Gerhard Mayrhofer[4]

1. Christian Doppler Laboratory for Structural Integrity in Rail Vehicle Design, Institute of Structural Durability and Railway Technology, Graz University of Technology, Inffeldgasse 25d, 8010 Graz, Austria
2. Prüfinstitut für Betriebsfestigkeit und Schienenfahrzeugtechnik GmbH, Graz, Austria
3. Siemens Mobility Austria GmbH, Eggenberger Straße 31, 8020 Graz, Austria
4. Miba Frictec GmbH, Peter Mitterbauer Str. 1; A-4661 Roitham, Austria

Schienenfahrzeugtagung Graz 2026

Friction-induced vibration (FIV) in brake systems

Frictional interaction in brake system cause vibration.

Low-frequency vibration

- Brake judder
- Groan noise
- Structural fatigue



[1]

High-frequency vibration

- Squeal noise
- Abnormal wear
- Brake hot spot

Passenger discomfort

+

Hazardous to both environment and safe operation

Project aim

Develop modelling and assessment methods for friction induced vibration of railway bogie – brake system

- Simulation modelling methods
  - Multibody dynamics (MBD) models
- Experimental assessment methods
  - Local contact and frictional characteristic assessment
  - Brake test bench validation of the MBD models



[2]

Simulation modelling methods

Existing simulation approaches

Finite-element (FE) method

- High accuracy
- Effective in local contact analysis
- Large computational effort

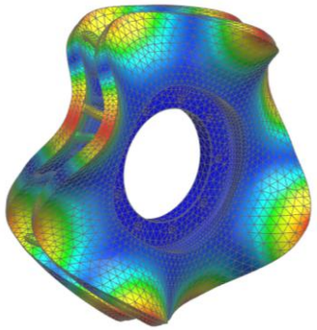

Multibody dynamics model

- Lower computational effort
- Effective in large scale dynamic analysis
- Considers system components as rigid

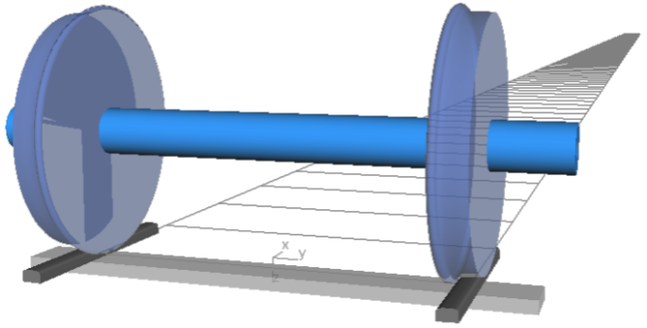

Rigid-elastic coupled multibody dynamics model

- Combination of FE based flexible body and rigid body
- Capable of capturing minute motions related to component flexibility

Simulation modelling methods

Rigid-elastic coupled MBD model – Global bogie model

- **Problems in the development of the simulation model**
  - Subject to numerous force inputs from various sources
  - Numerous moving parts and spring/damper system
  - Not all required parameter values are available for modelling

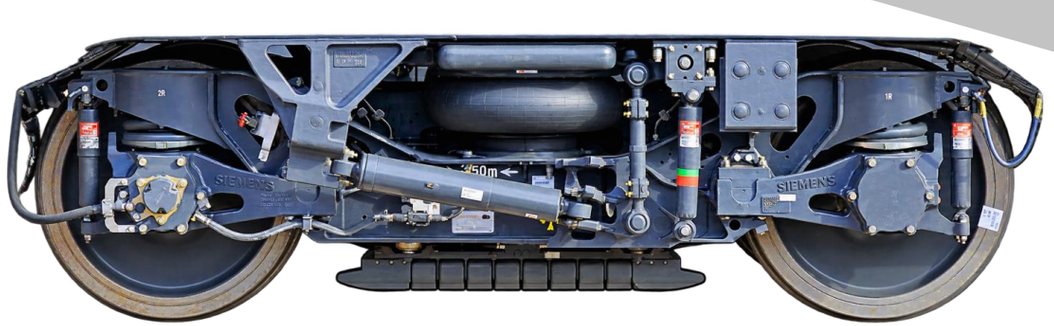

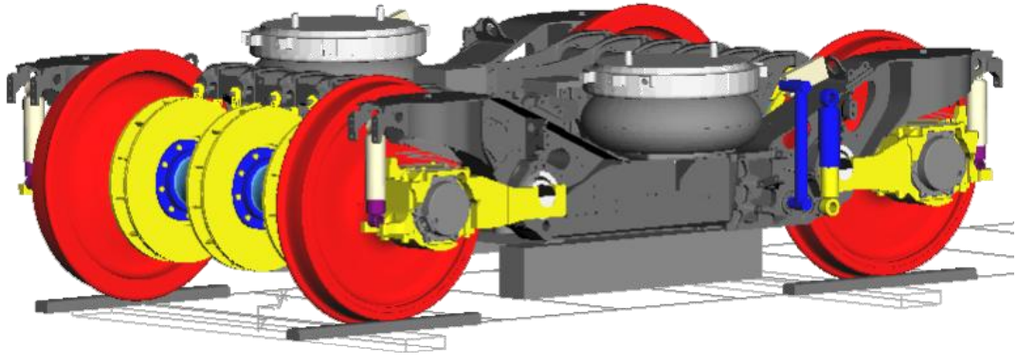

Simulation modelling methods

Rigid-elastic coupled MBD model – Global bogie model

Flexibility of the bogie frame

+

Flexibility of the selected components in the brake calliper system

+

Torsional characteristics of the wheelset and the brake disc assembly

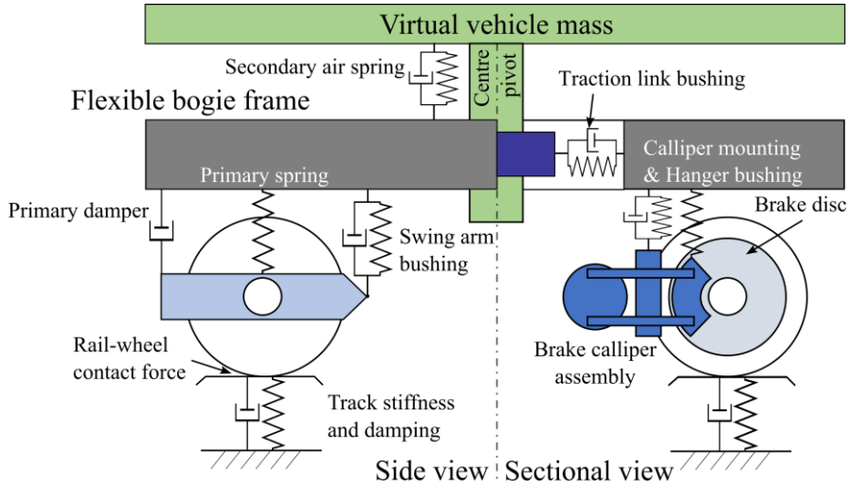

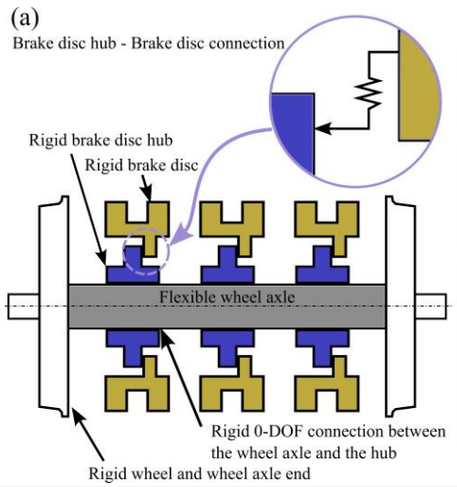

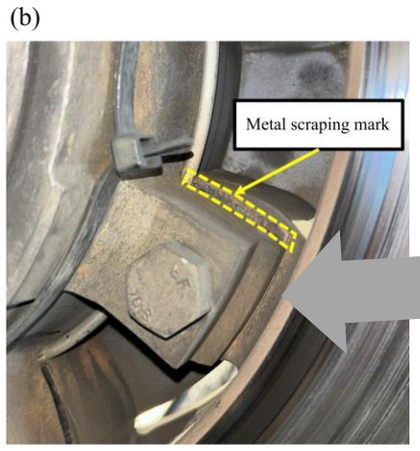

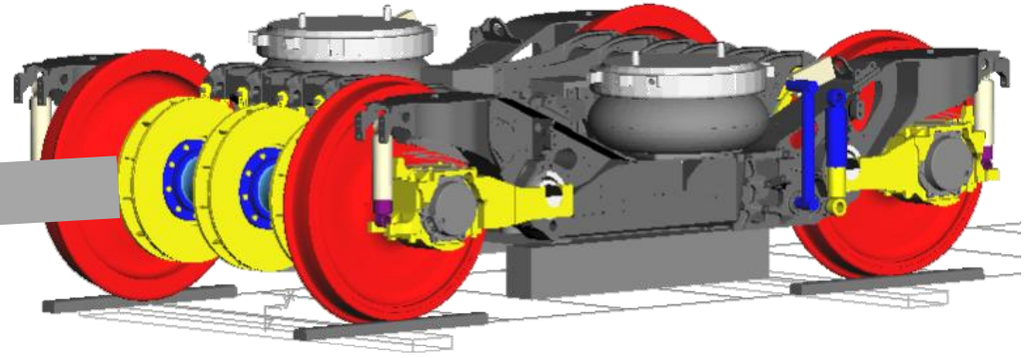

Simulation modelling methods

Rigid-elastic coupled MBD model – Global bogie model

- An in-service measurements conducted on a selected trailer bogie
- An equivalent single-bogie model is constructed and simulated under the same driving profile and brake application profile as the in-service measurement
- The developed model reproduced closely matching temporally evolving vibrational phenomena



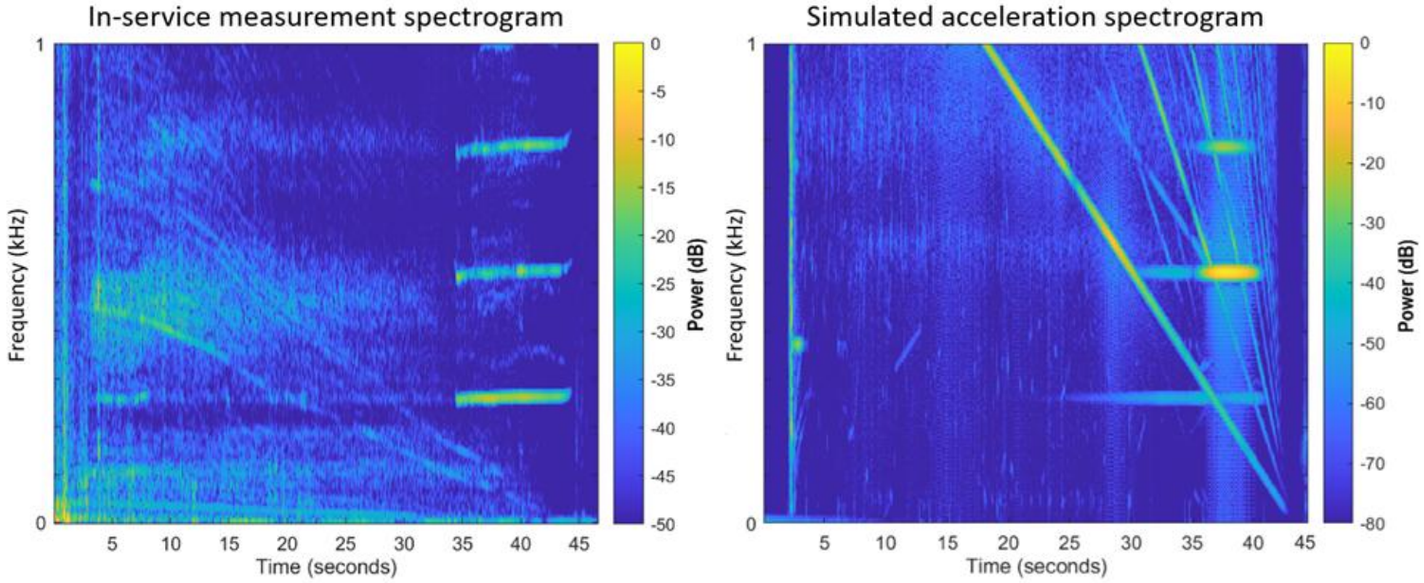

Simulation modelling methods

Rigid-elastic coupled MBD model – Global bogie model

- Eigenvalue analysis of the bogie system
  - Eigenfrequencies closely matching the observed vibrational frequency were identified
  - Wheelset torsional modes look to be one of the key contributing factor

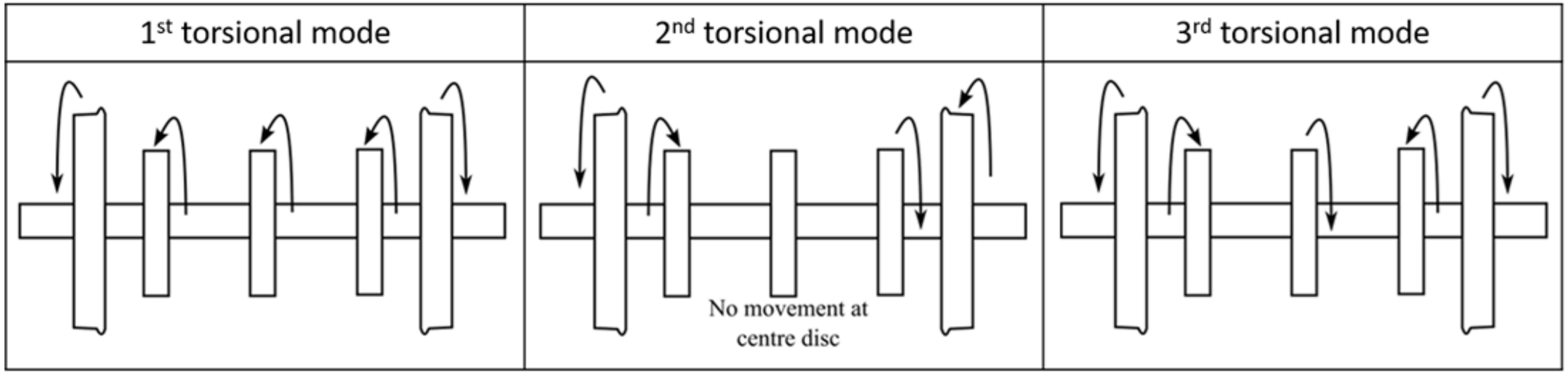

Experimental assessment methods

- What are the contributing factors?
- How to validate the model?
- How to improve the model?
- How to reduce/mitigate the vibrational issue?

Experimental assessment methods

Brake test bench experiment

&

Test bench equivalent simulation

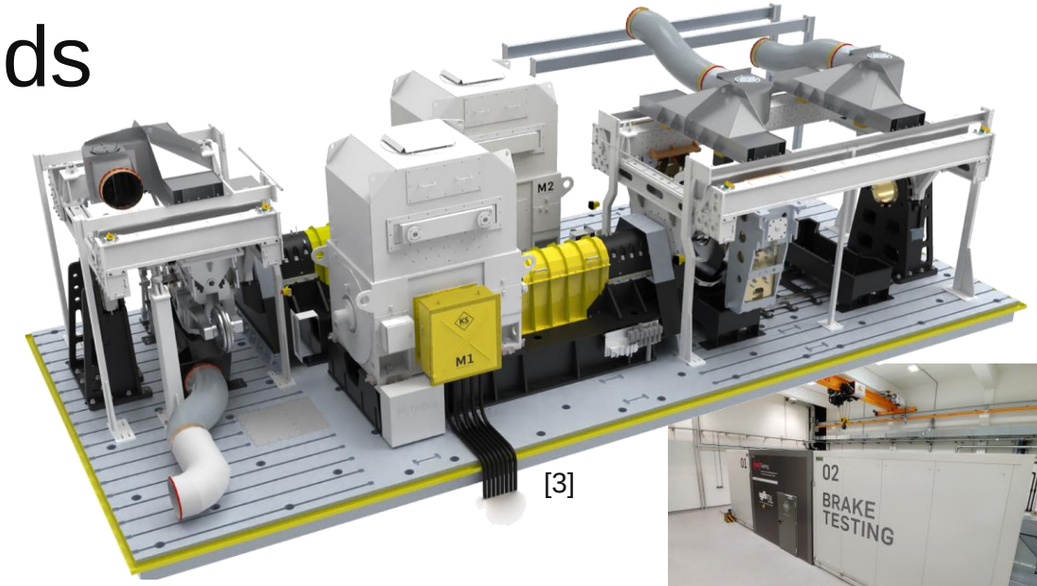

[3]

Aim of the experimental approach:

- Evaluation of local contacts, friction characteristics
- Development of a simplified bogie equivalent testing fixture
- Validation of the brake calliper simulation modelling methods

Technical Properties	
Power (each engine)	1.4 MW
Max. braking torque	35000 Nm
Const. braking torque	9200 Nm
Max. rotational speed	3000 rpm
Max. braking pressure	16 bar
Max. braking force of block	60 kN
Max. braking force of calliper	140 kN
Applicable diameters of test specimens	
Wheel disc	0.35m – 1.5m
Axle-mounted disc brake	0.30m – 0.7m
Wheel mounted disc brake	0.50m – 1.2m

Experimental assessment methods

- Entire bogie experiment is time consuming and cost intensive.
- Two approaches are adopted;

1. Single brake calliper local contact analysis setup
2. Simplified bogie multi-brake calliper test setup

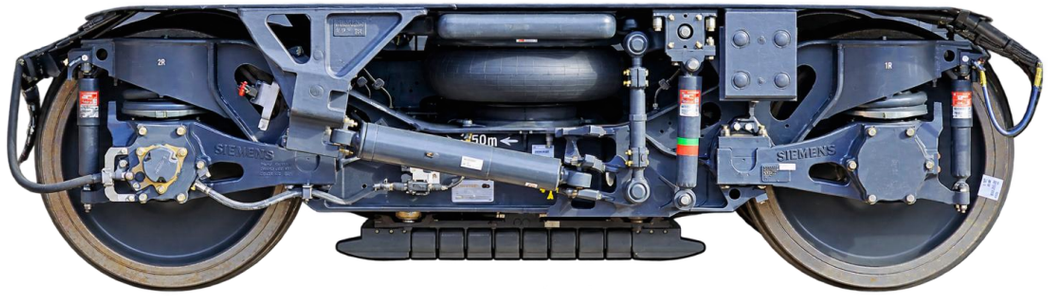

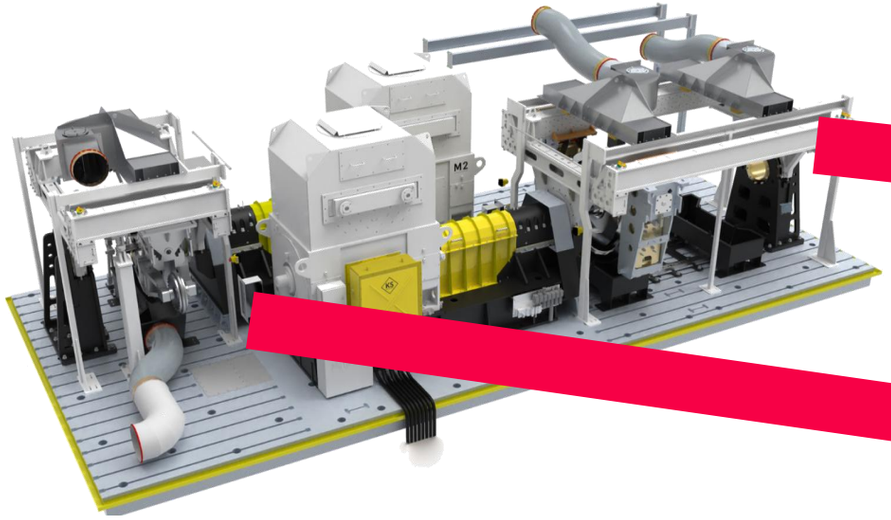

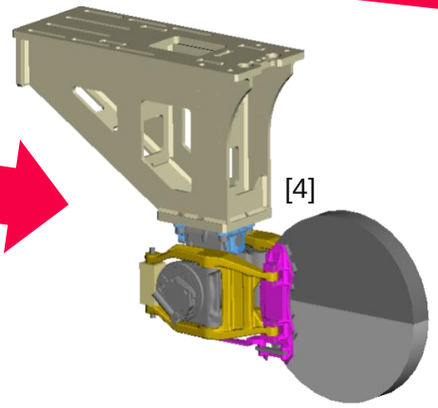

Single brake calliper test setup

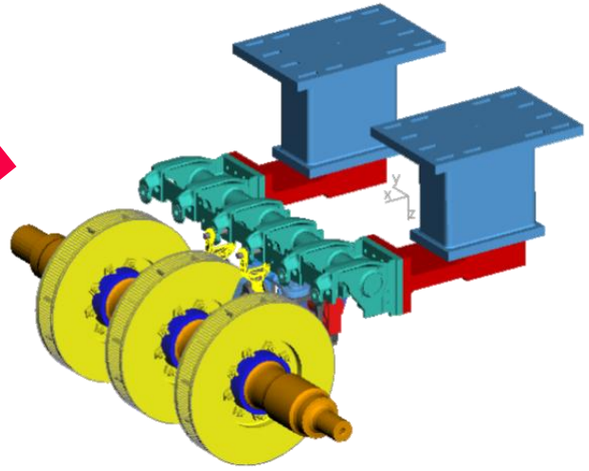

Simplified bogie multi-brake calliper test setup

Experimental assessment method

Stage 1

Single brake calliper test

- Establishing testing procedure
- Setting up the measurement procedure
- Local contact simulation model construction and validation

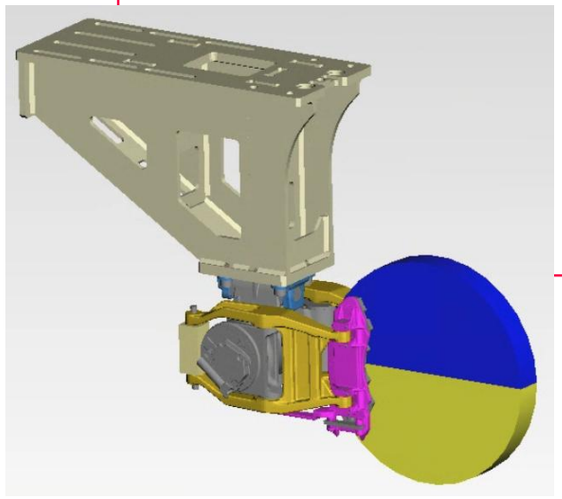

Stage 2

Simplified bogie setup 1

- Single brake calliper application
- Confirmation of testing capability and testing fixture design validation
- Vibratory behaviour measurement

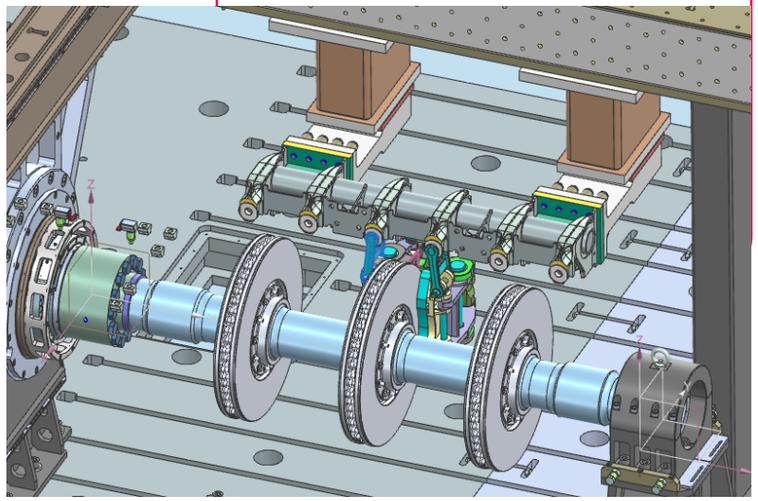

Stage 3

Simplified bogie setup 2

- Multi brake calliper application test
- Actual vehicle operational condition testing
- Spring stiffness variation study

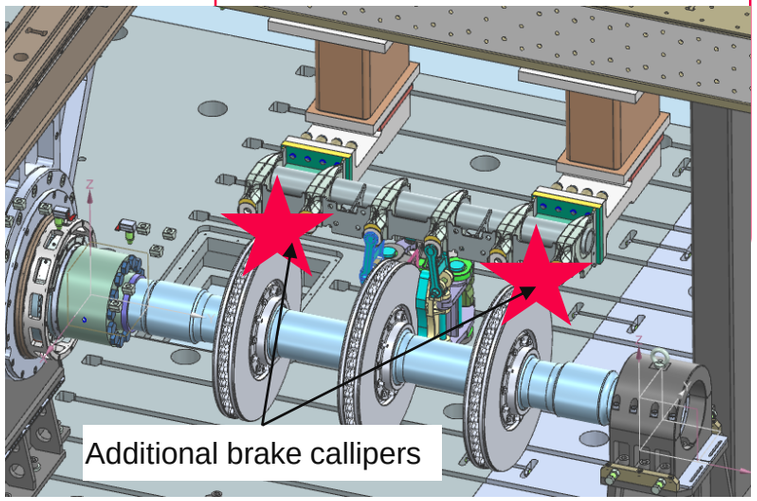

Experimental assessment method

Stage 1

Single brake calliper test

- Establishing testing procedure
- Setting up the measurement procedure
- Local contact simulation model construction and validation

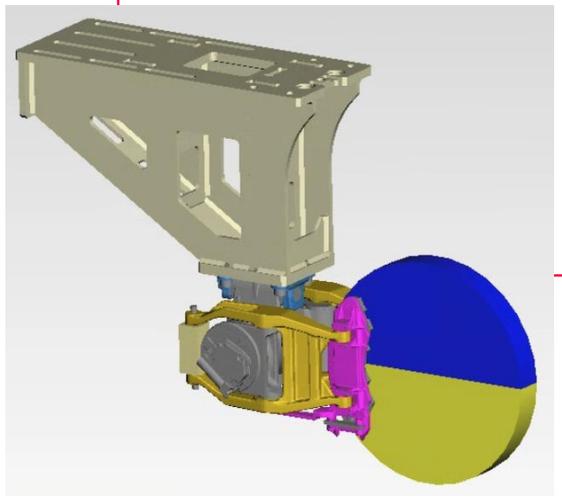

Three major relationships to investigate in experiment:

- Frictional characteristics vs Structural vibration
  - Velocity dependency, temperature dependency, wet & dry
- Brake pad/disc construction vs Structural vibration
  - Friction material and disc material differences, rigid/flexible brake pad design
- Structural vibration vs Acoustic phenomena
  - Mechanical characteristics, velocity dependency, temperature dependency

Experimental validation method

- Structural vibration vs Acoustic phenomena

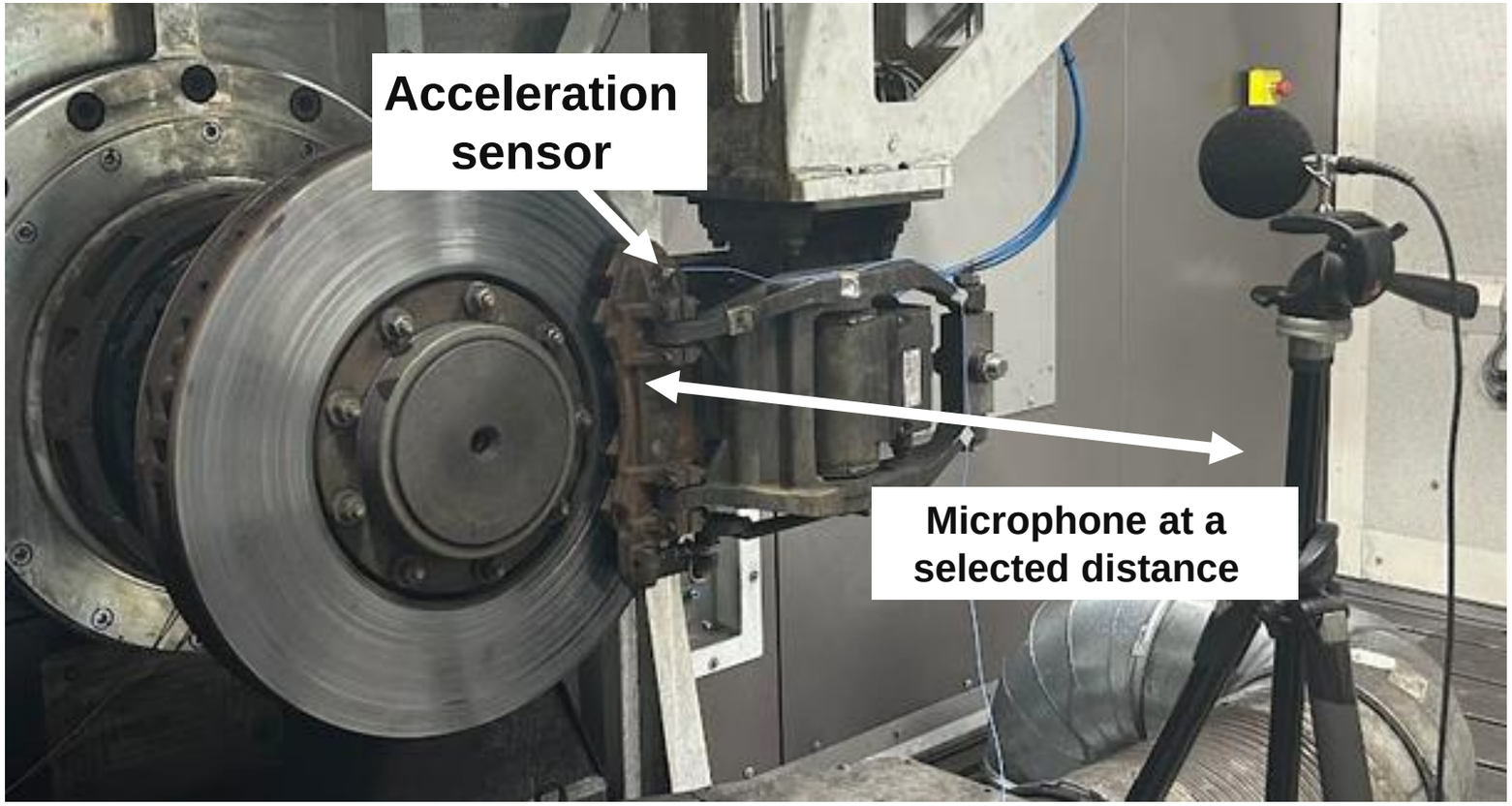

[5]

Experimental assessment method

- Frictional characteristics vs Structural vibration
  - Velocity dependency
    - Stop braking experiments
  - Temperature dependency
    - Drag braking experiments
  - Lubrication conditions
    - Wet & dry braking experiments

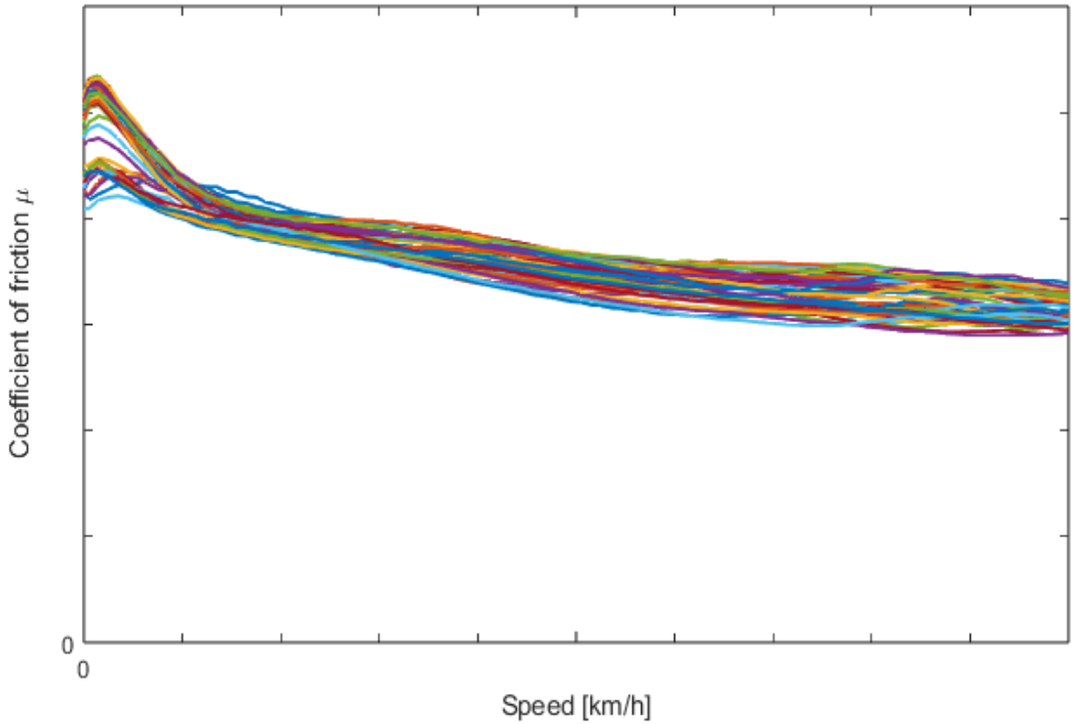

Velocity dependency of coefficient of friction

Experimental assessment method

- Brake pad/disc construction vs Structural vibration
  - Friction block differences
  - Brake pad flexibility





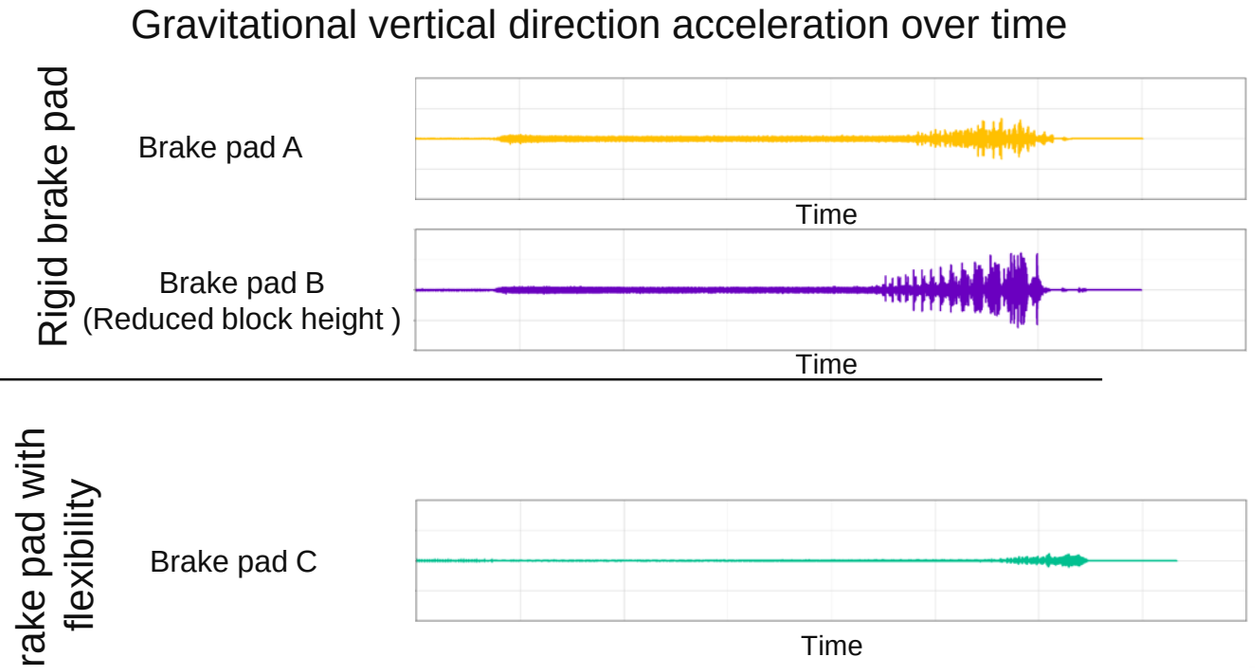

[5]

Experimental assessment method

- Test bench equivalent model for the single brake calliper test
  - Reproduction of the test bench specific condition
  - Deeper understanding of local contact modelling

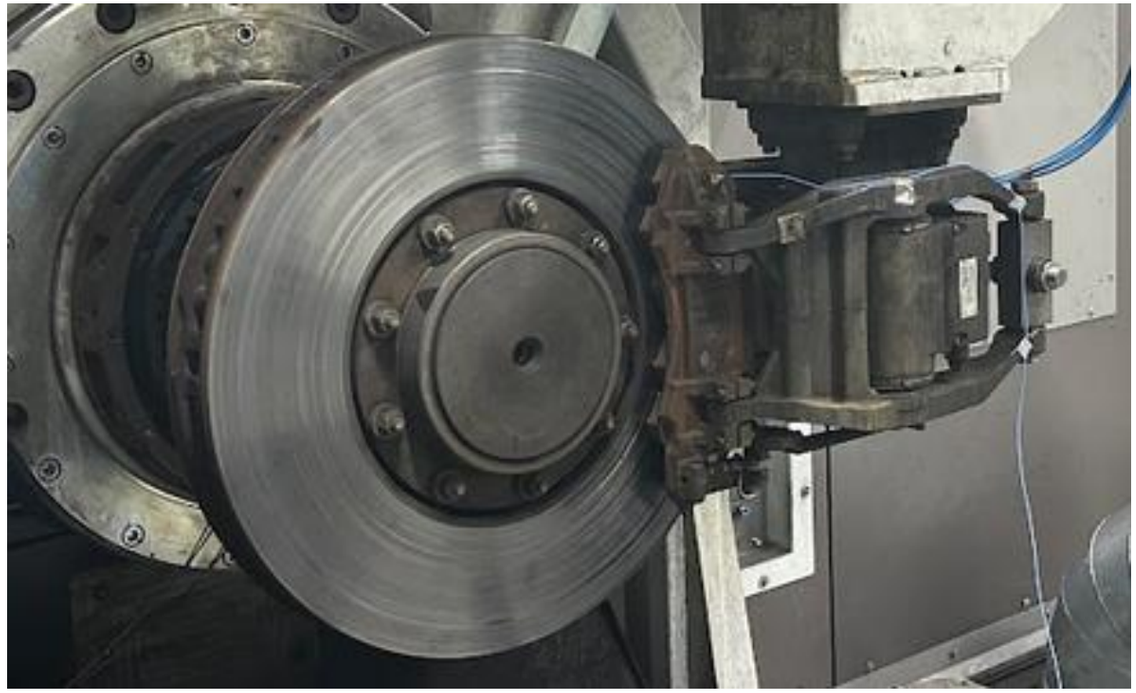

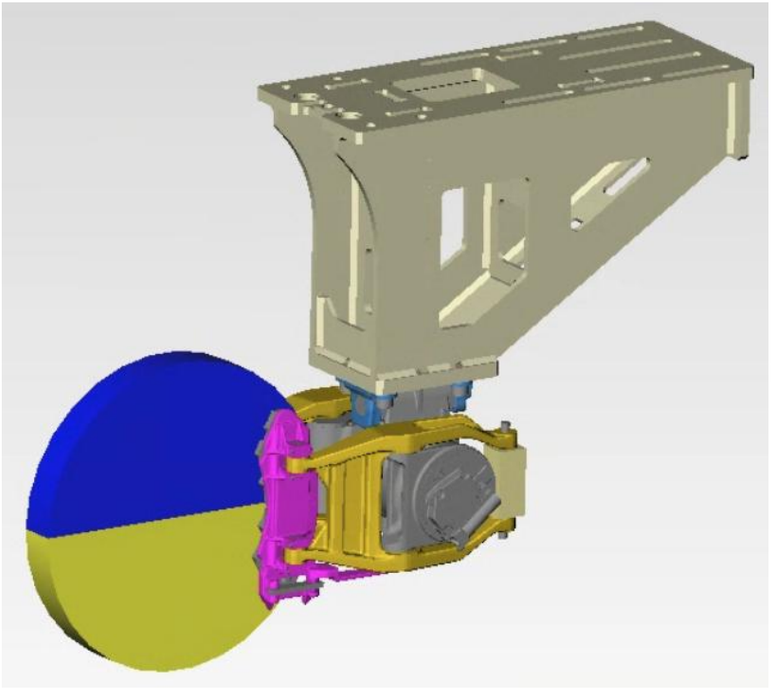

Experimental assessment method

Stage 2

Simplified bogie setup 1

- Single brake calliper application
- Confirmation of testing capability and testing fixture design validation
- Vibratory behaviour measurement

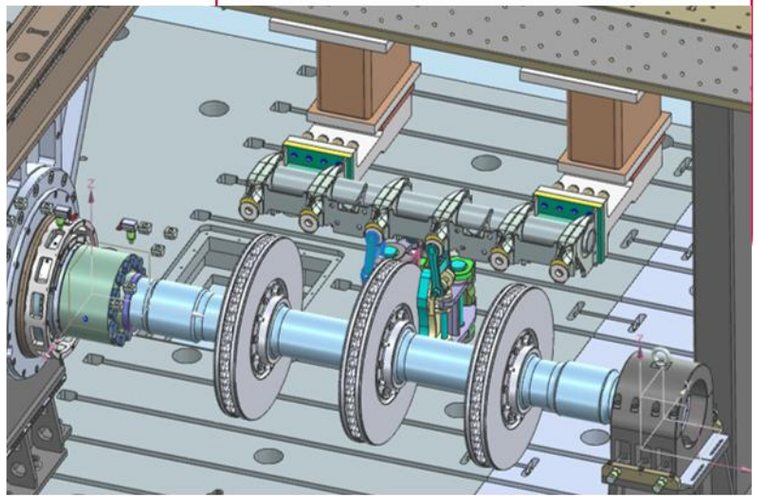

Stage 3

Simplified bogie setup 2

- Multi brake calliper application test
- Actual vehicle operational condition testing
- Spring stiffness variation study

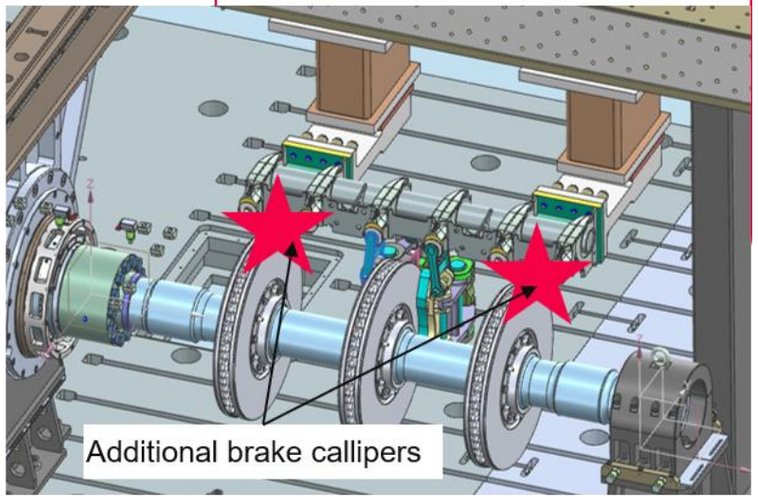

Experimental validation method

Simplified bogie setup

- Test bench setup

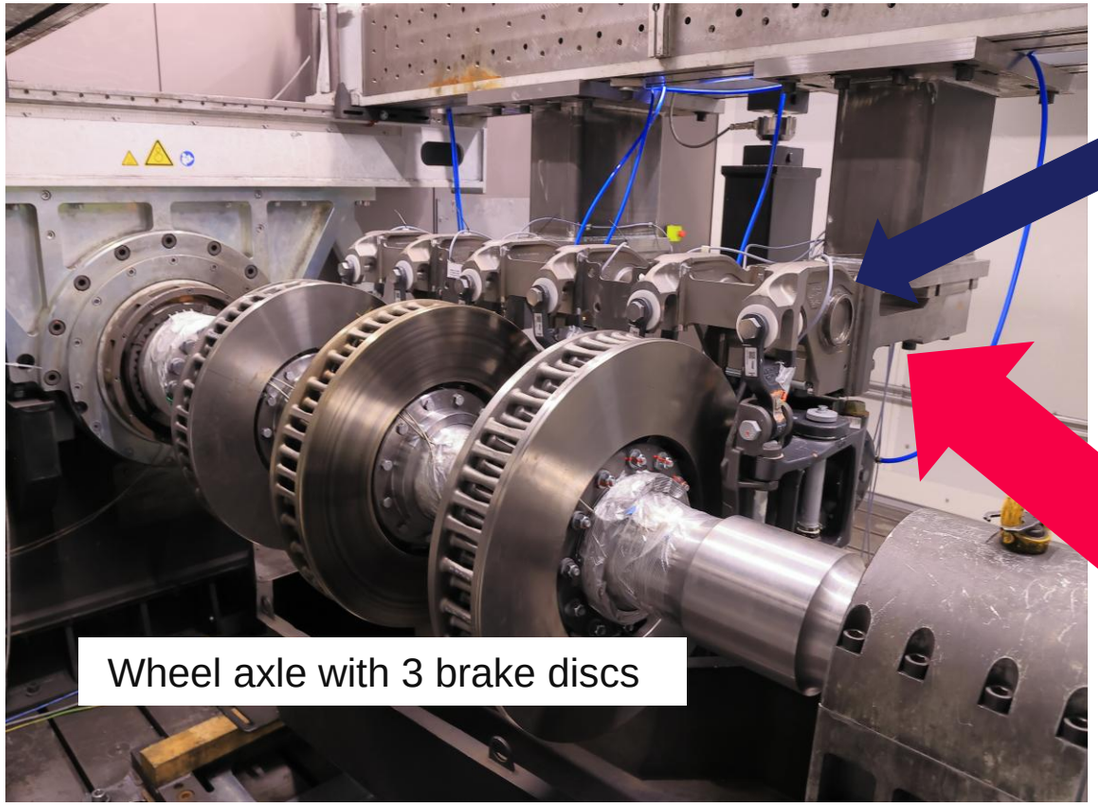

Wheel axle with 3 brake discs

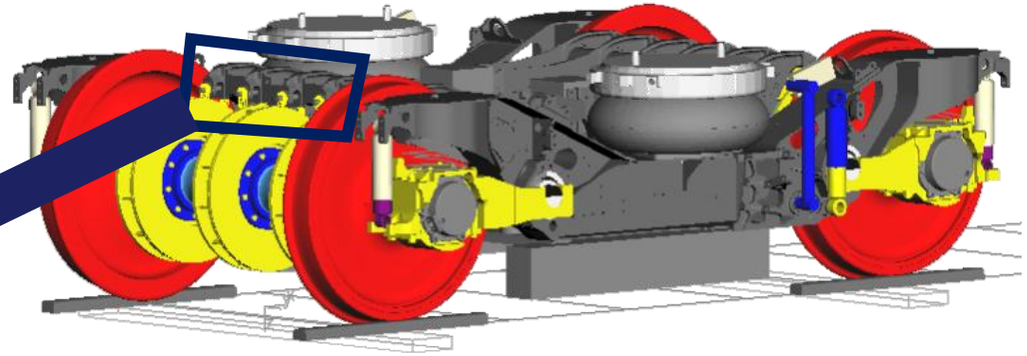

- Test fixture using the actual bogie frame structure
- Support springs for replicating the bogie frame

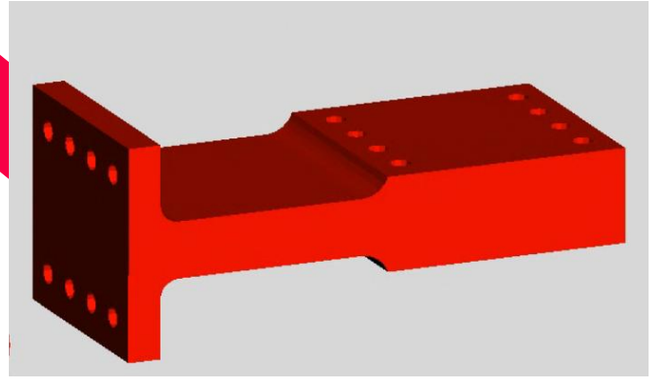

+ Sims for adjusting the ride height

Experimental validation method

Simplified bogie setup

- Measurement items
  - Strain gauges
    - Support spring bending
    - Hanger link compression
    - Wheel axle torsion
    - Hanger beam bending
  - Acceleration sensors
  - Acoustic recordings
- To be experimented
  - Brake pad differences
  - Beam spring stiffness variation
  - Further parameters to be defined

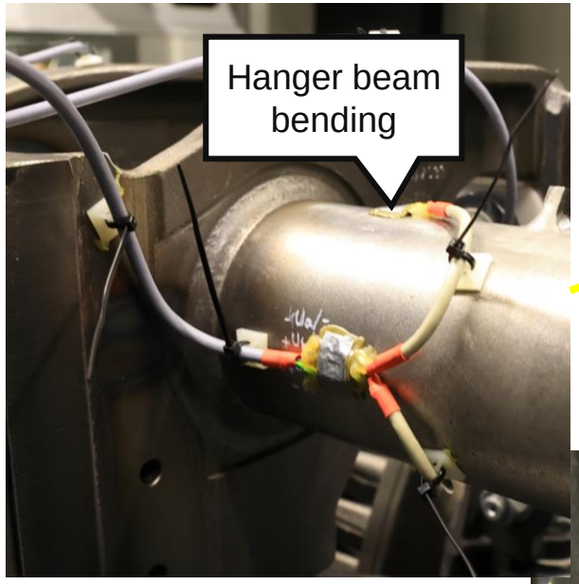

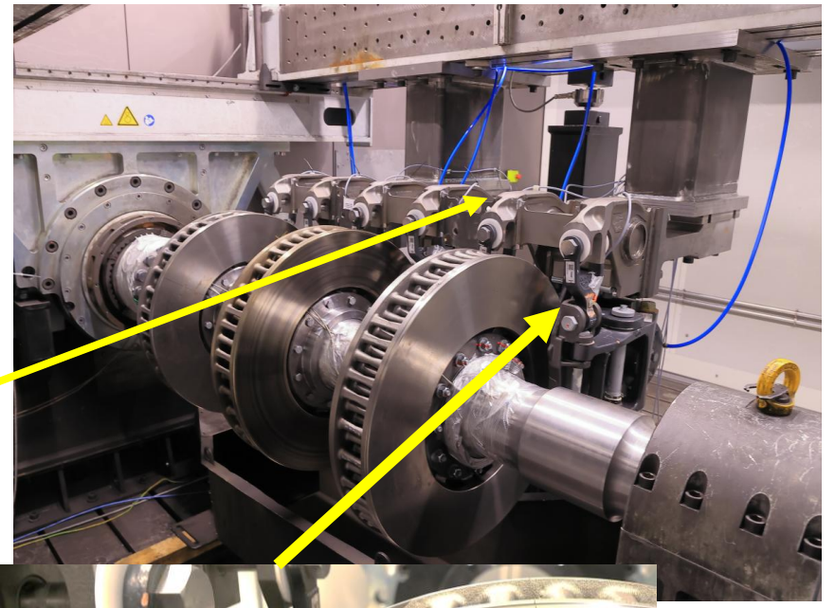

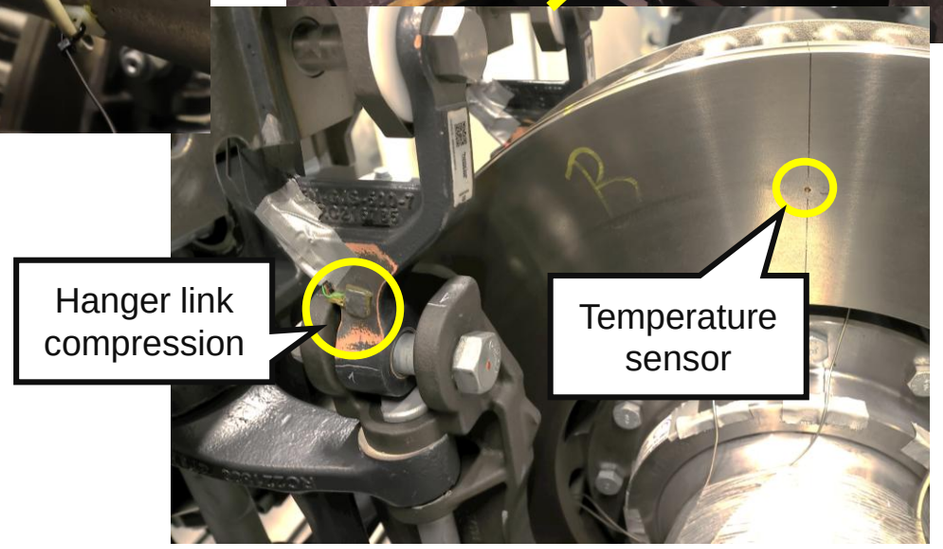

Experimental validation method

Simplified bogie calliper setup

- Test bench setup

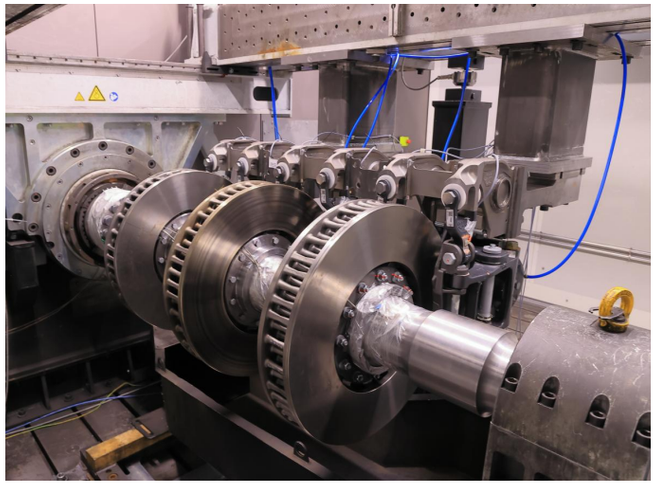

- Equivalent MBD model

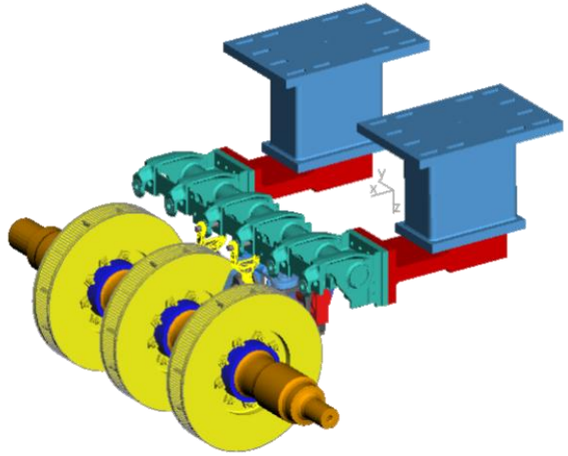

Objectives

- Validate the modelling method of the brake calliper model
- Improve modelling method, identify main influencing parameters
- Simulate and confirm vibration mitigating measures

Conclusion and outlook

- Developed a basic architecture for simulating FIV in railway bogie-brake system with MBD.
- The developed model was able to replicate the vibrational phenomena under braking.
- Local contact and frictional measurement analyses conducted to deepen the understanding of the FIV.
- Modelling method to be validated and improved through brake test bench experiments using partial bogie frame structure.

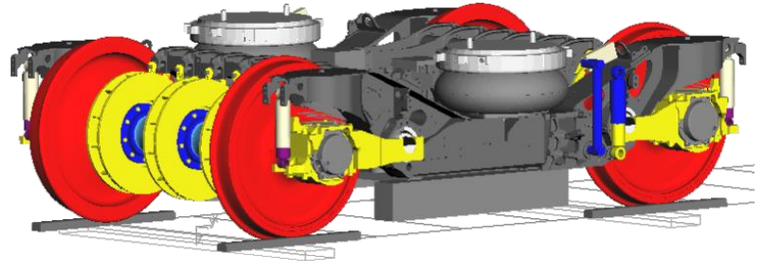

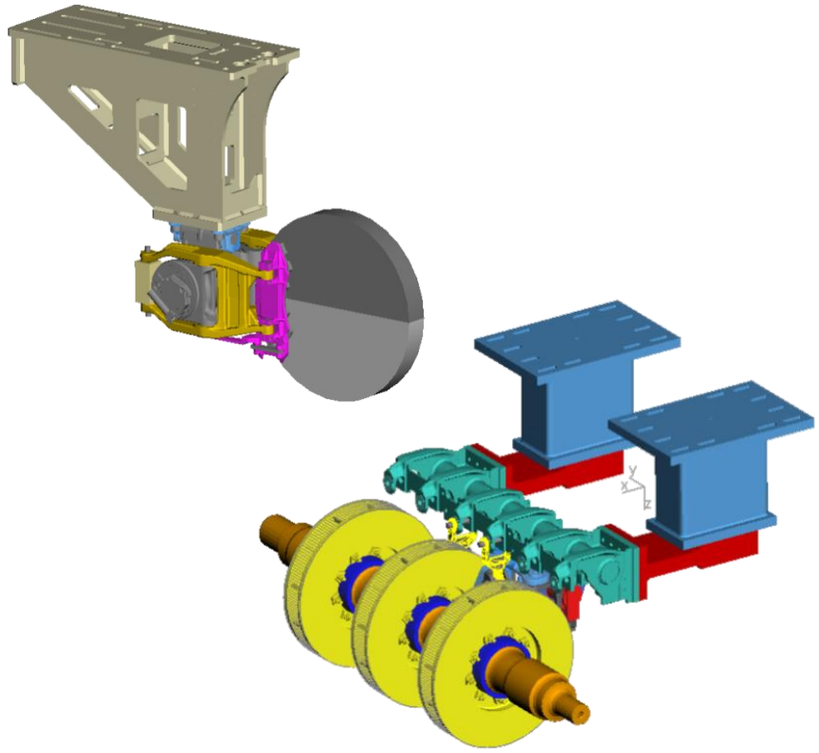

Acknowledgements

The financial support by the Austrian Federal Ministry of Economy, Energy and Tourism, the National Foundation for Research, Technology and Development and the Christian Doppler Research Association is gratefully acknowledged.

References

[1] Kaoru Takehama, 2025

[2] Kaoru Takehama, 2023

[3] KS Engineers (Kristl, Seibt & Co. Gesellschaft m.b.H.), 2023

[4] Zamani Mahsa: Numerical analysis of friction-induced vibrations in a railway disc brake system, Master thesis, under work

[5] Hasler Cordula: Experimental investigation of friction-induced vibrations in a railway disc brake system, Master thesis, 2026