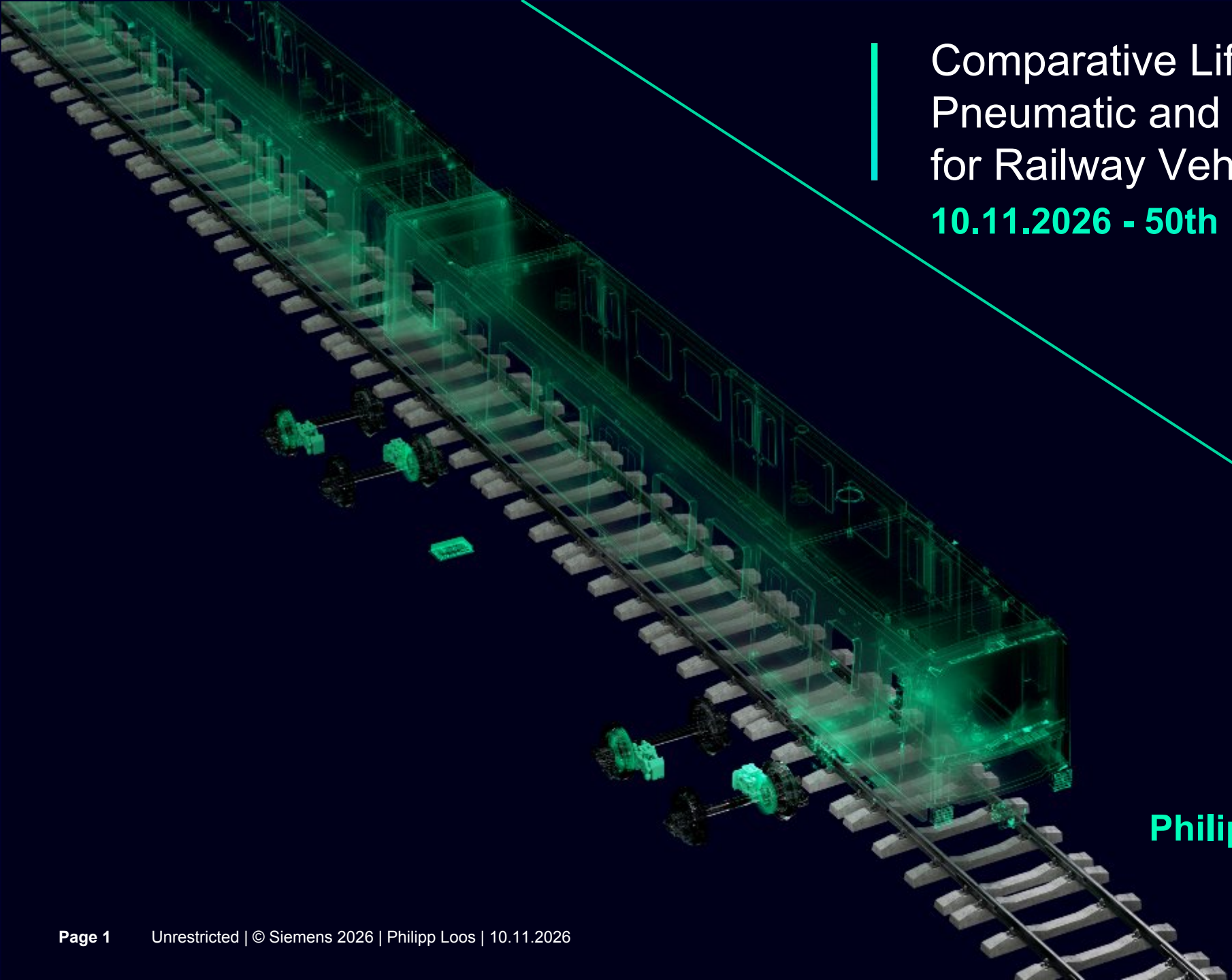

Comparative Life Cycle Assessment of Pneumatic and Air-free Brake Systems for Railway Vehicles

10.11.2026 - 50th Rolling Stock Conference

Philipp Loos – Siemens Mobility

Unrestricted | © Siemens 2026 | Philipp Loos | 10.11.2026

SIEMENS

Why a life cycle perspective is required

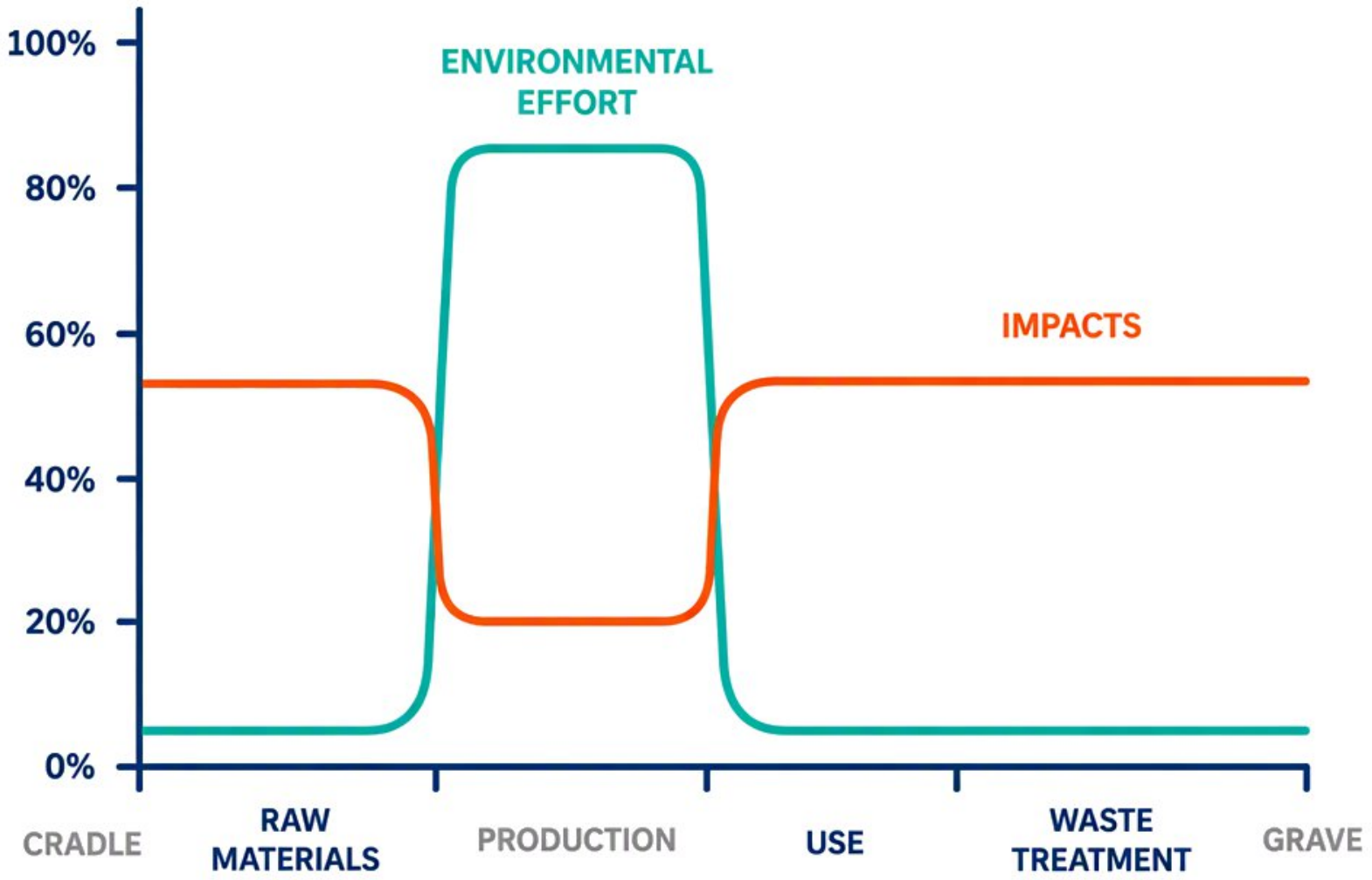

LCA covers all life-cycle stages and helps avoid shifting environmental impacts from one stage to another.

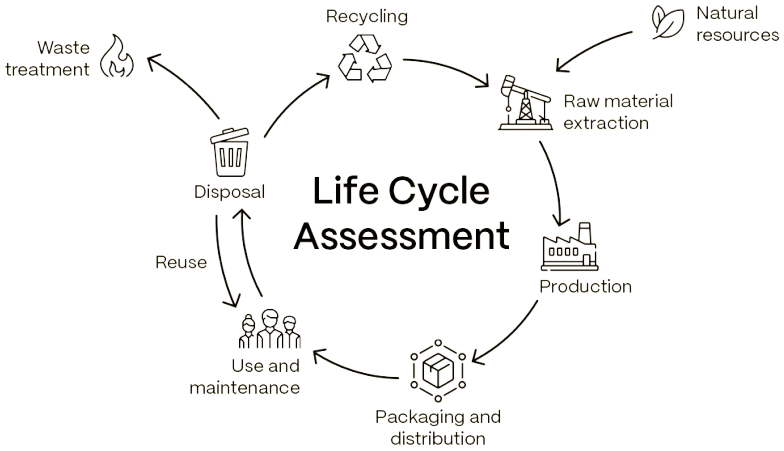

Unrestricted | © Siemens 2026 | Philipp Loos | 10.11.2026

SIEMENS

Architecture: Pneumatic Brake System

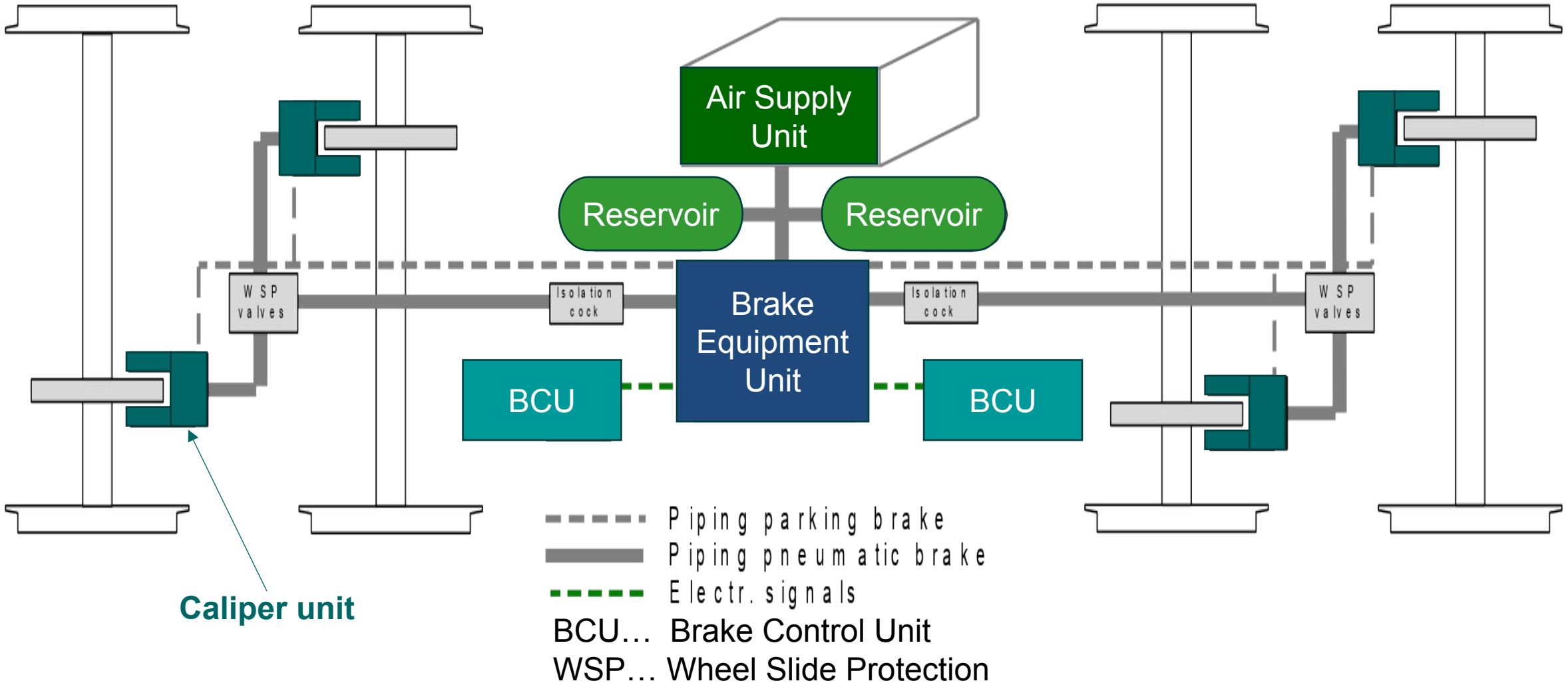

Unrestricted | © Siemens 2026 | Philipp Loos | 10.11.2026

Architecture: Air-free Brake System

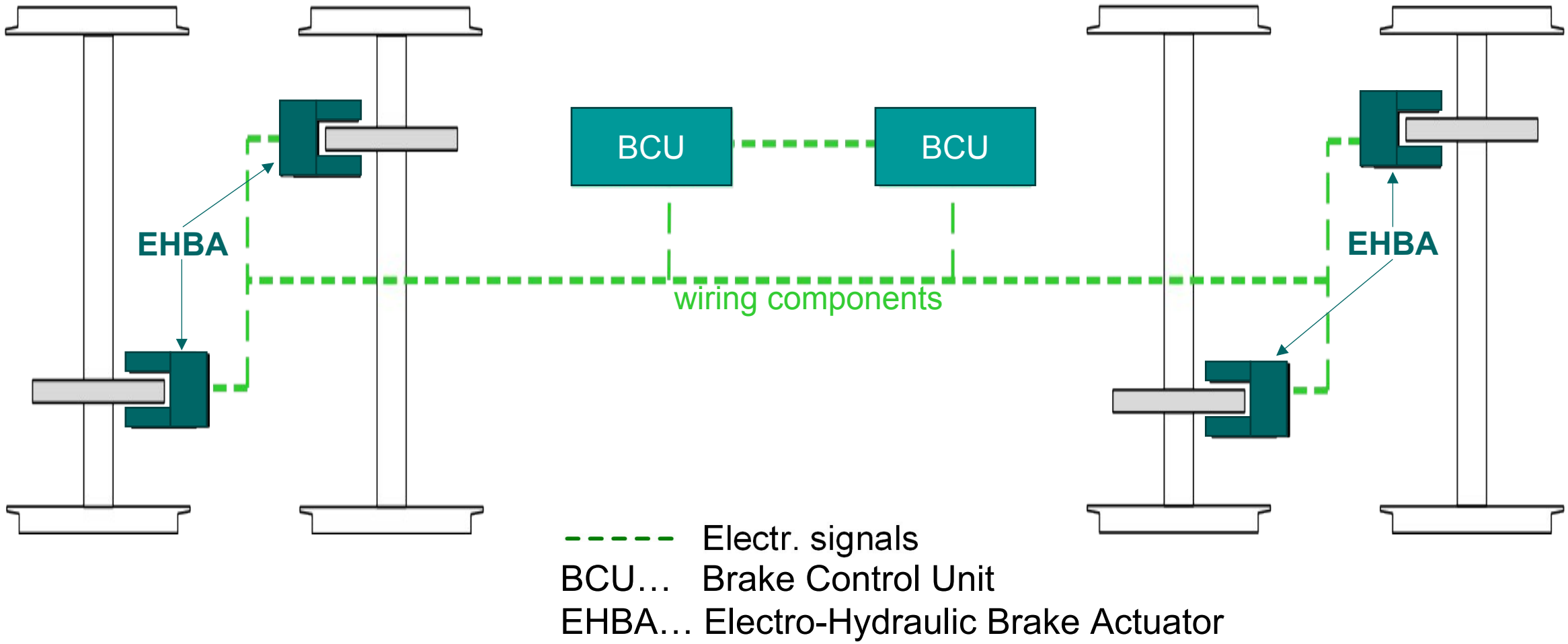

Unrestricted | © Siemens 2026 | Philipp Loos | 10.11.2026

Goal and scope of the comparative LCA

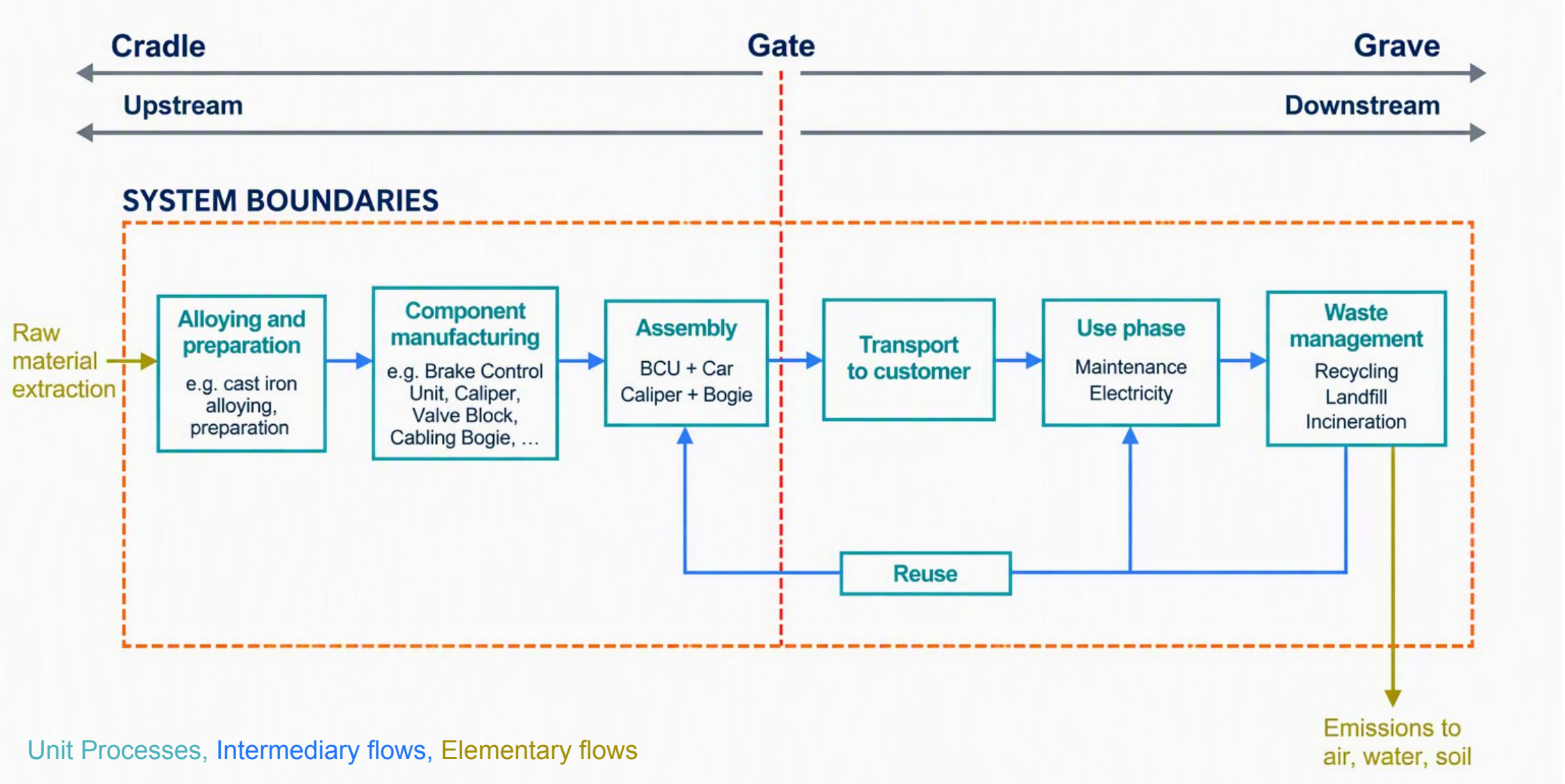

Unrestricted | © Siemens 2026 | Philipp Loos | 10.11.2026

From inventory data to environmental impacts

Life Cycle Inventory = ∑ Elementary flows

LCIA

Impact Category	Unit
Climate change	kg CO_2 eq
Ozone depletion	kg CFC11 eq
Ionising radiation	kBq U-235 eq
Photochemical ozone formation	kg NMVOC eq
Particulate matter	disease inc.
Human toxicity, non-cancer	CTUh
Human toxicity, cancer	CTUh
Acidification	mol H^+ eq
Eutrophication, freshwater	kg P eq
Eutrophication, marine	kg N eq
Eutrophication, terrestrial	mol N eq
Ecotoxicity, freshwater	CTUe
Land use	Pt
Water use	m^3 depriv.
Resource use, fossils	MJ
Resource use, minerals and metals	kg Sb eq

LCA Software:

SimaPro

Database:

ecoinvent Centre

Unrestricted | © Siemens 2026 | Philipp Loos | 10.11.2026

SIEMENS

Results - Life Cycle Impacts

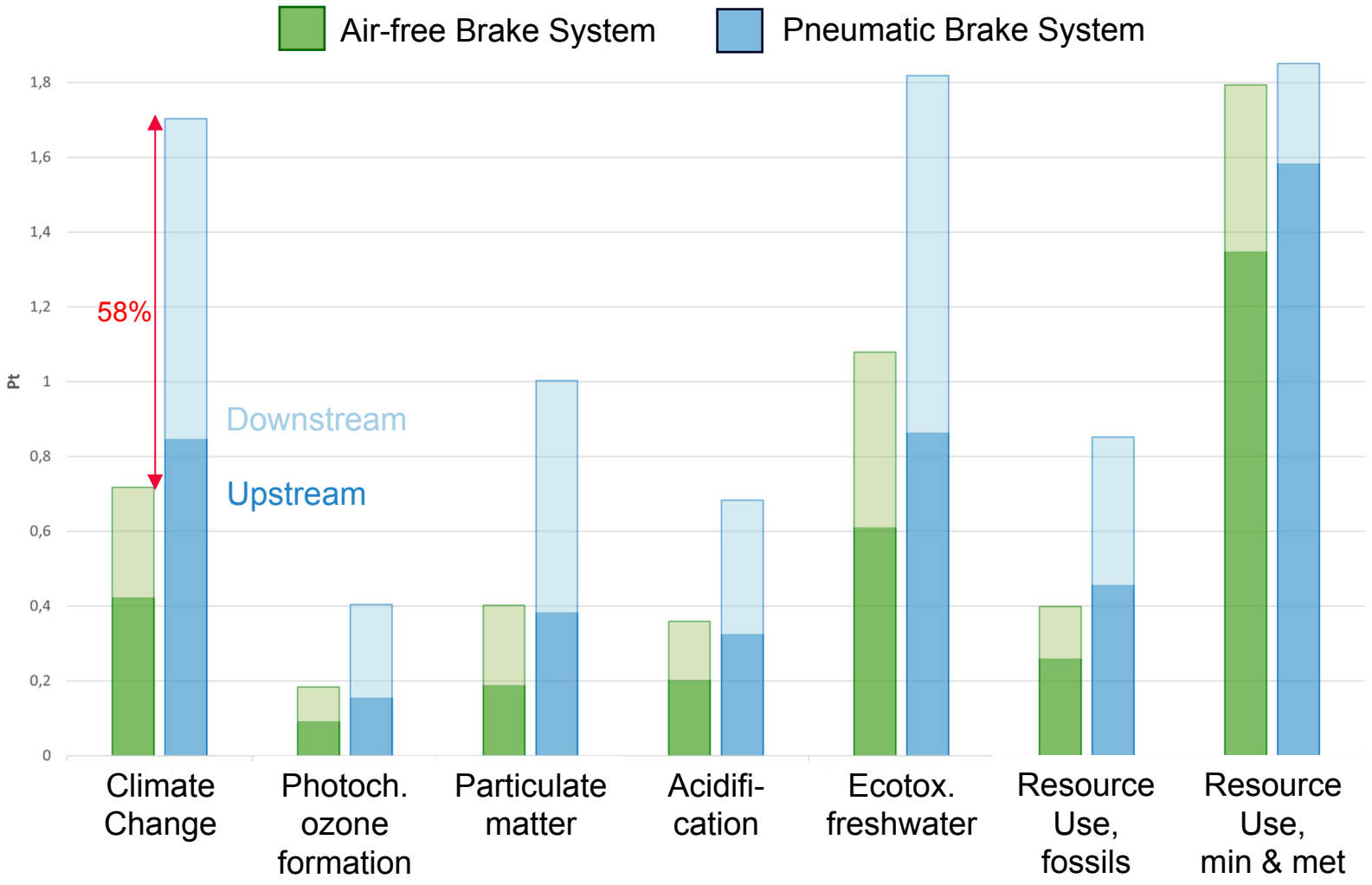

Main Takeaways:

- Lower environmental impact in all assessed categories
- 58% lower carbon footprint
- Contribution analysis for further assessment details

Assessment Basis:

- Cradle-to-grave LCA
- Six-car metro train, 40 years of operation in Vienna
- Renewable Austrian electricity mix assumed for the use phase

Unrestricted | © Siemens 2026 | Philipp Loos | 10.11.2026

SIEMENS

Contribution Analysis: Upstream

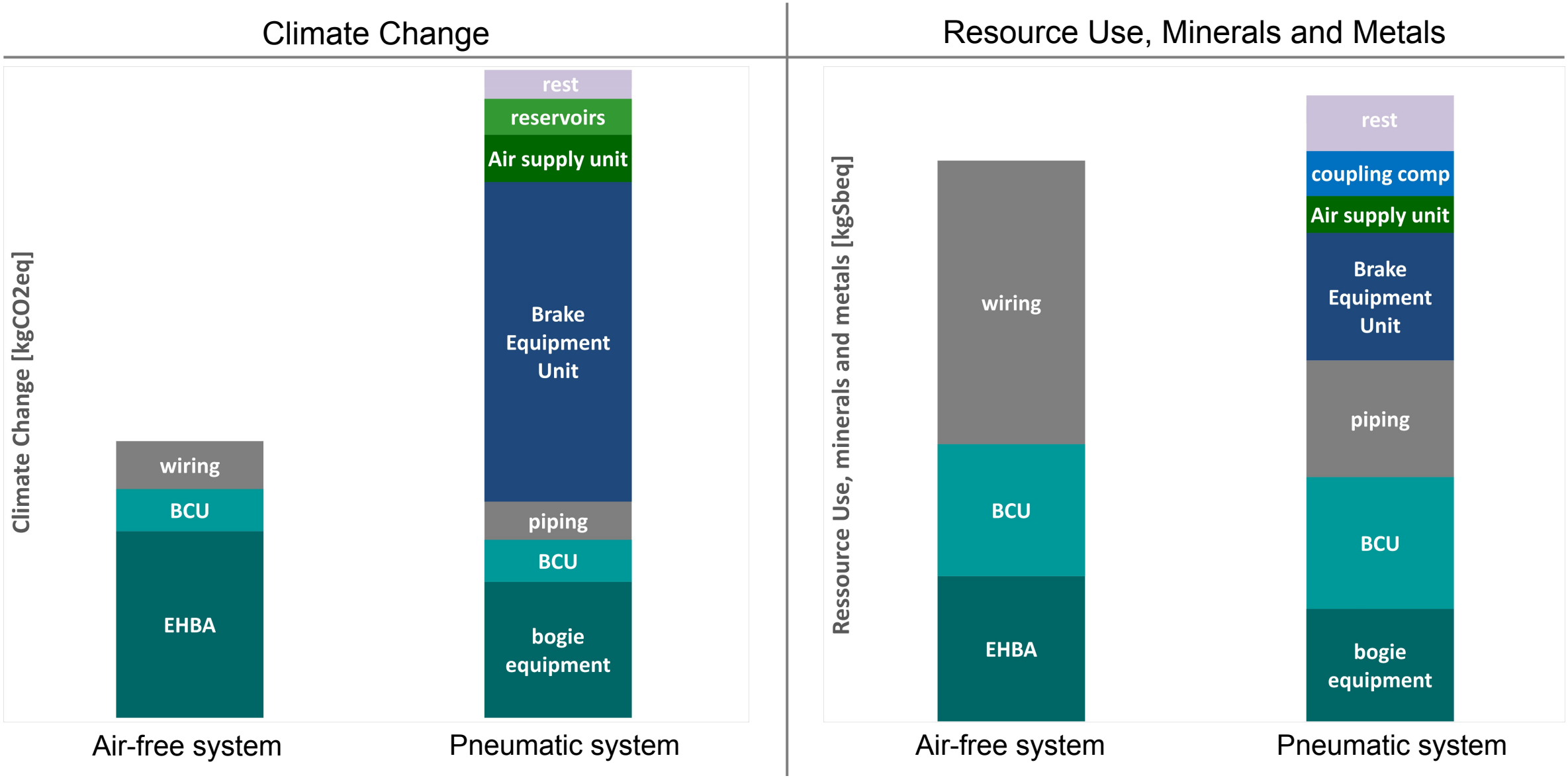

Unrestricted | © Siemens 2026 | Philipp Loos | 10.11.2026

Detailed Analysis: Air-free Brake System Upstream – Climate Change

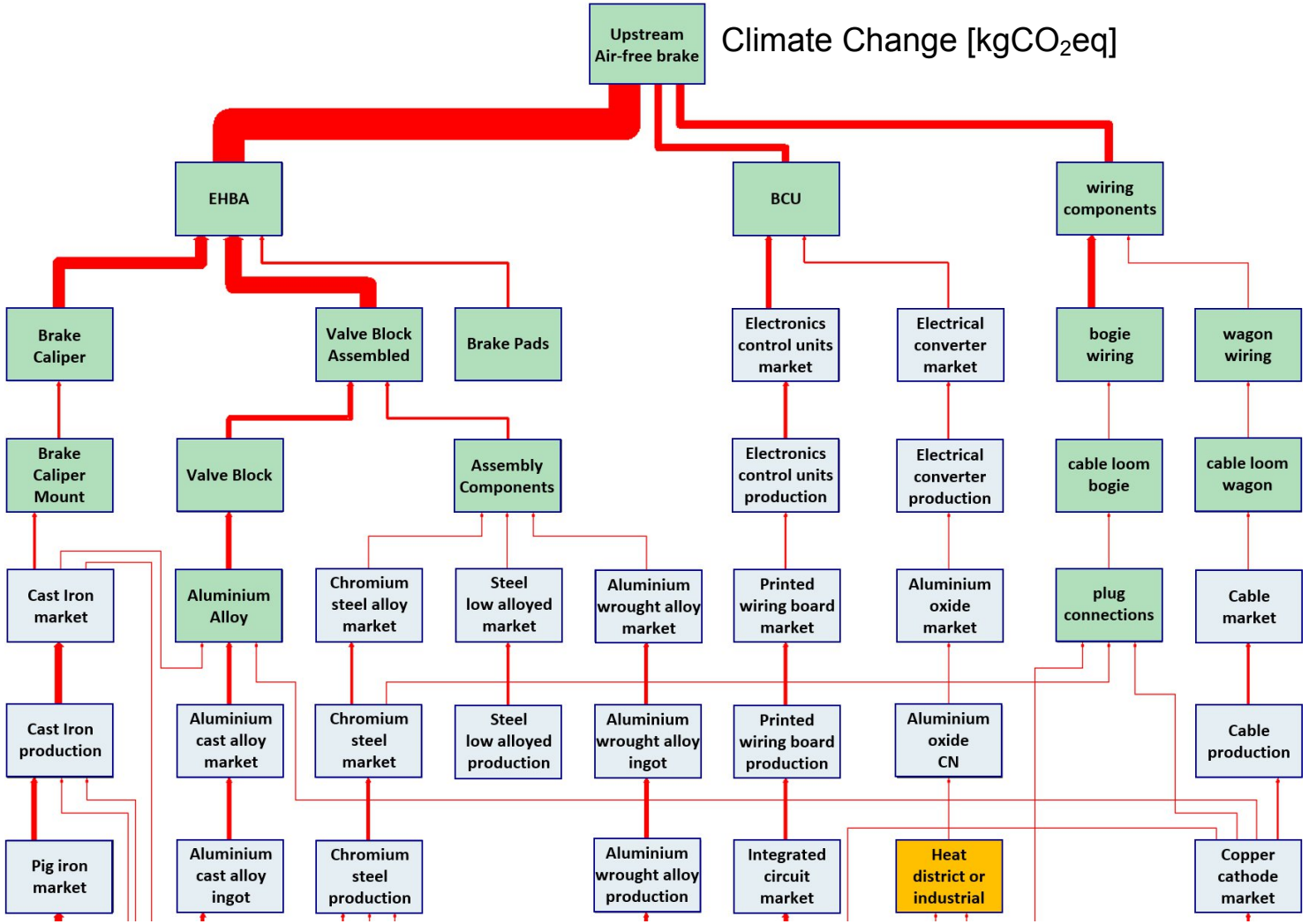

The **process tree** provides **detailed information on impact contributions** down to the resource level.

- EHBA as main contributor
- Valve block: aluminium alloy identified as hotspot
- Improvement Measure: Increase the secondary material fraction

SIEMENS

Deep Dive: Traction Energy Savings



Weight difference: ~ **940kg**
Increased traction energy demand

Savings: ~20 kWh/day

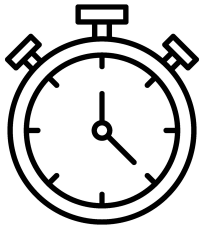

Slower release time: **~1s**
Energetic losses in traction unit

Savings: ~26 kWh/day

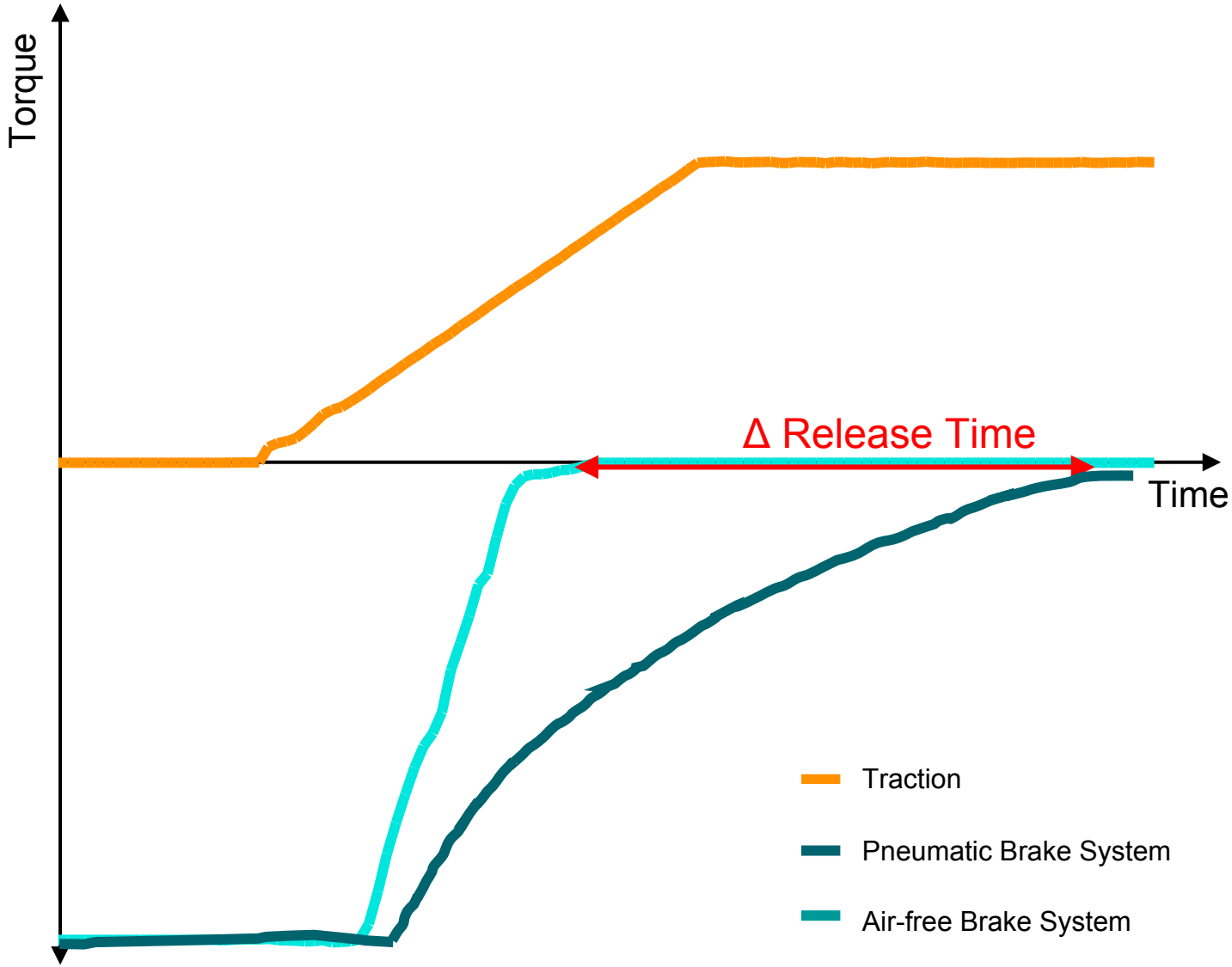

Unrestricted | © Siemens 2026 | Philipp Loos | 10.11.2026

SIEMENS

Contribution Analysis: Downstream

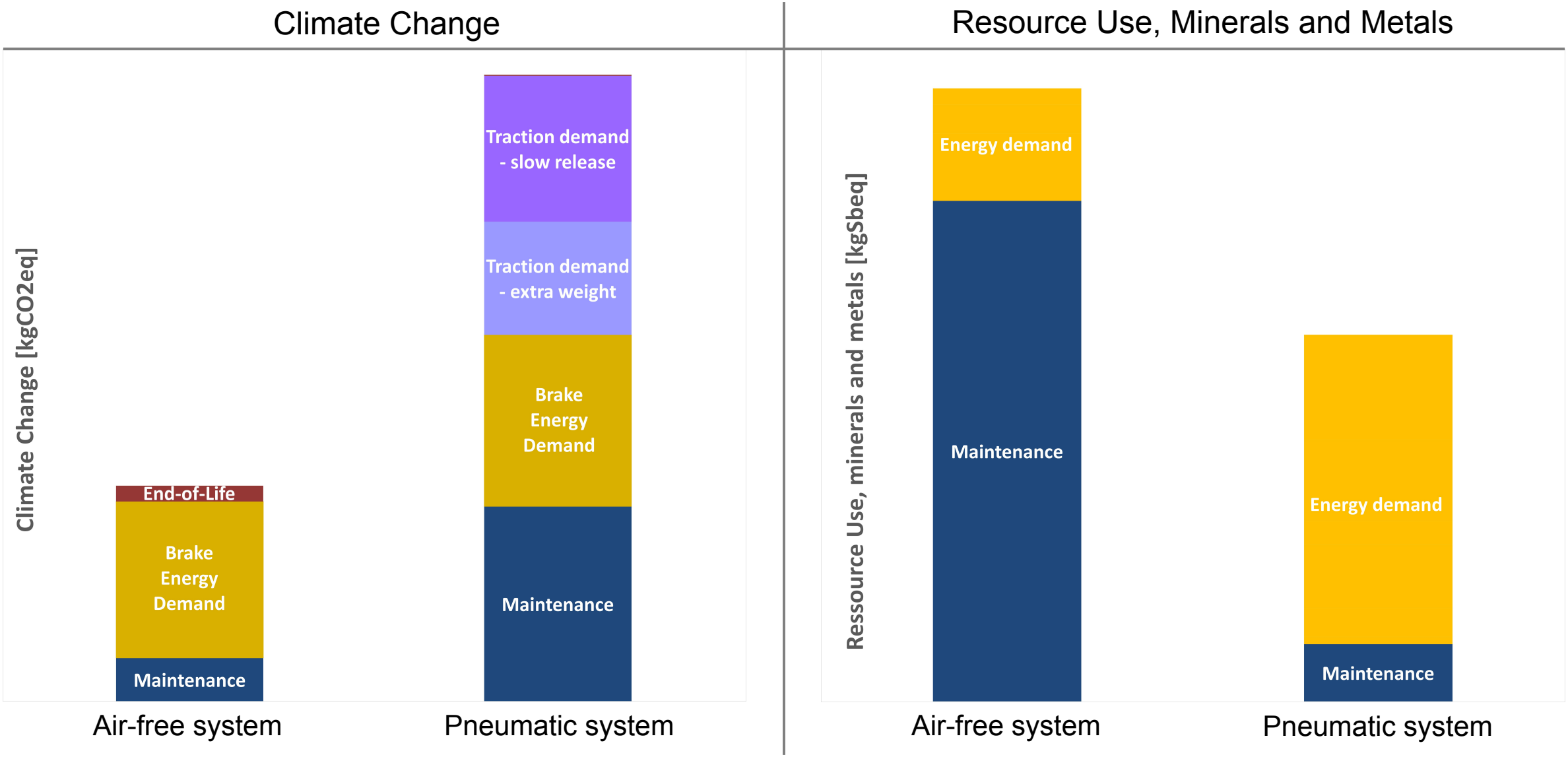

Unrestricted | © Siemens 2026 | Philipp Loos | 10.11.2026

SIEMENS

Air-free Brake System Deep Dive: Downstream - Resource Use

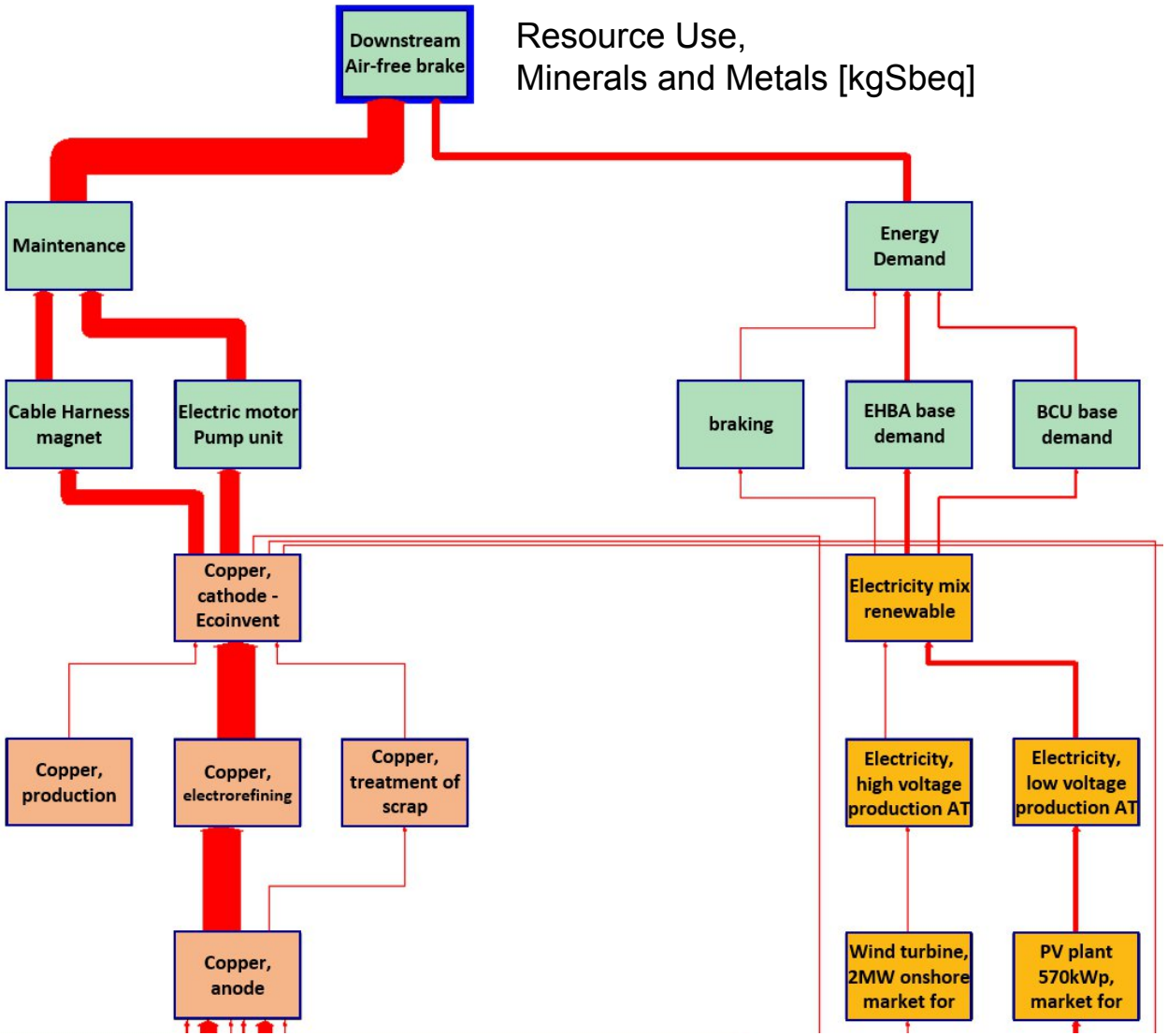

The **process tree** provides **detailed information on impact contributions** down to the resource level.

- Maintenance causes the main downstream resource hotspot
- Regular replacement of copper-rich components increases resource use
- Improvement potential: extended replacement intervals and component overhaul

SIEMENS

Conclusions

- The Air-free Brake System reduces environmental impacts in all assessed categories
- **Key environmental hotspots** remain:
  - Pneumatic Brake System: Brake equipment unit, maintenance and additional traction energy demand
  - Air-free Brake System: Copper content in electronic components
- Both systems offer **improvement potential** through **increased use of secondary materials and optimized maintenance strategies.**
- The Air-free Brake System LCA results were published in an **externally verified Environmental Product Declaration (EPD)**

SIEMENS

Thank you.
Questions?

SIEMENS