FP6-FutuRe
Cost effective regional lines

SCHIENENFAHRZEUGTAGUNG
2026

Europe's Rail

Cost efficient regional rolling stock

FP1 MOTIONAL
European Rail Network and Mobility Management

FP3 iam4Rail

FP5 TRANS4M-R
Transforming Europe's Rail Freight

FA7 pods 4 RAIL

FP2 R2DATO

Rail FP4 EARTH

FP6-FutuRe
Cost effective regional lines

https://rail-research.europa.eu/eu-rail-projects/

Rickard Persson[1*], Libor Lochman[2], and Thomas Müller[3],
1) KTH Royal Institute of Technology, Stockholm (Sweden), Email: patper@kth.se
2) Wabtec, Avellino (Italy)
3) DLR, Stuttgart (Germany)

TLP gelb (Adressatenkreis)

Background

Regional railway lines are vital for connecting rural areas and supporting the wider rail network.

Many such lines have been abandoned in recent decades due to high costs.



The German railbus (*Uerdinger Schienenbus*) of the 1950s became a huge success and earned the nickname **"Retter der Nebenbahnen"** ("Saviour of the Branch Lines").
What is needed to create a **Schienenbus 2.0**?

From a material science perspective, we could build trains just as simple today, but regulations don't allow it because they prioritize interoperability and safety over cost efficiency, needed especially on low-density lines.

TLP gelb (Adressatenkreis)

FutuRe Goal

To enhance the long-term economic, social, and environmental sustainability of low-density regional railways through the development of dedicated **vehicle concepts**, innovative **propulsion systems**, and advanced **signalling solutions**.

TLP gelb (Adressatenkreis)

Schienenbus 2.0

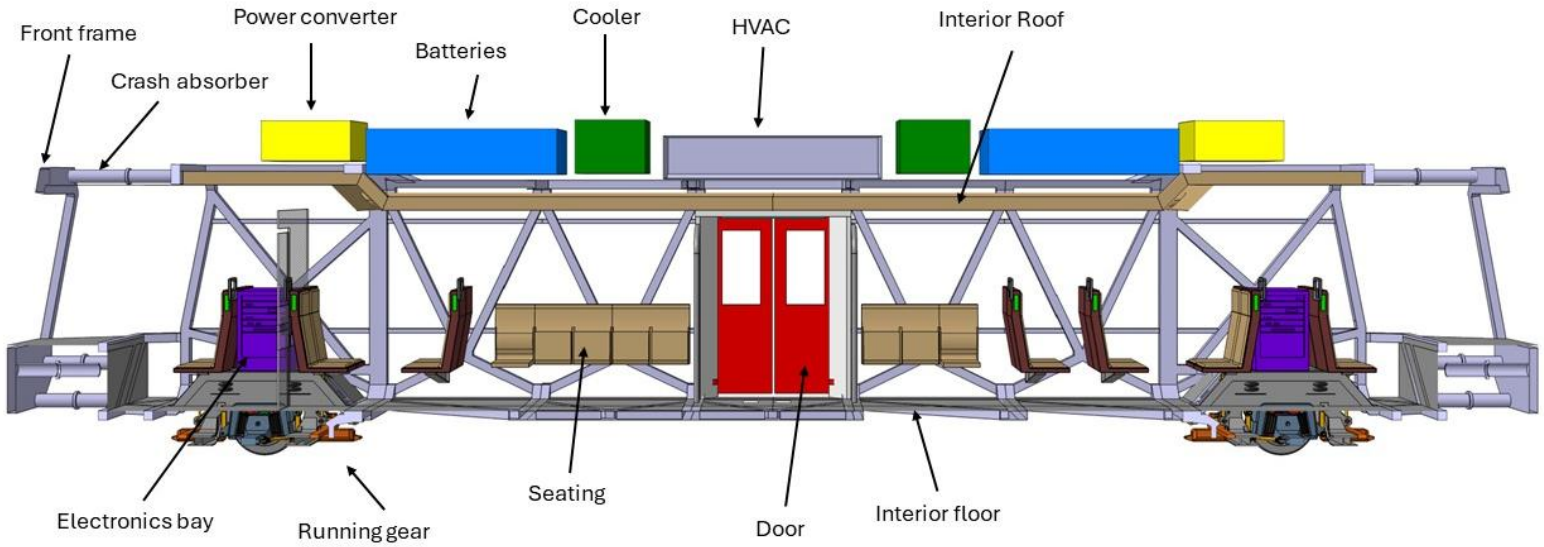

16 m version

11 m version

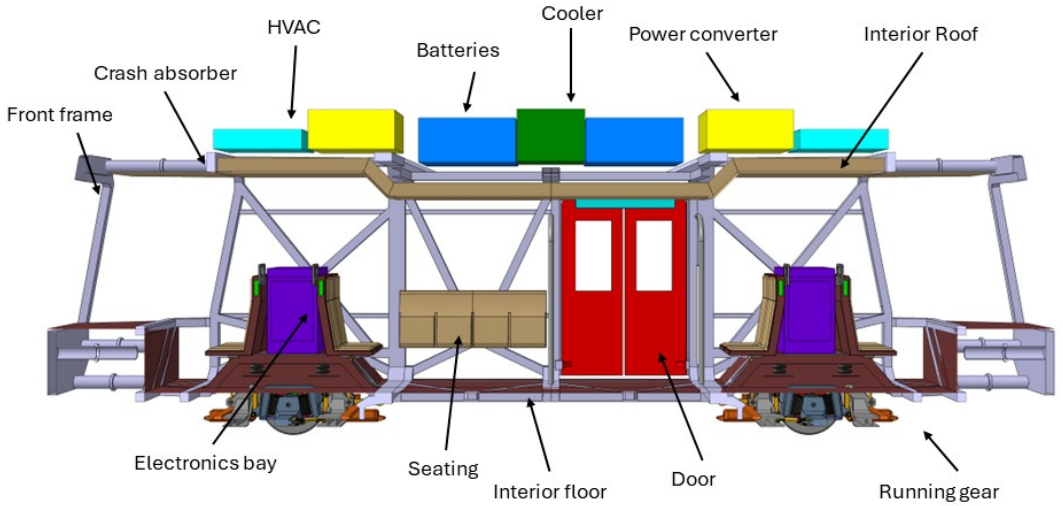

TLP gelb (Adressatenkreis)

FP6-FutuRe
Cost effective regional lines

Interior flexibility

Europe's Rail

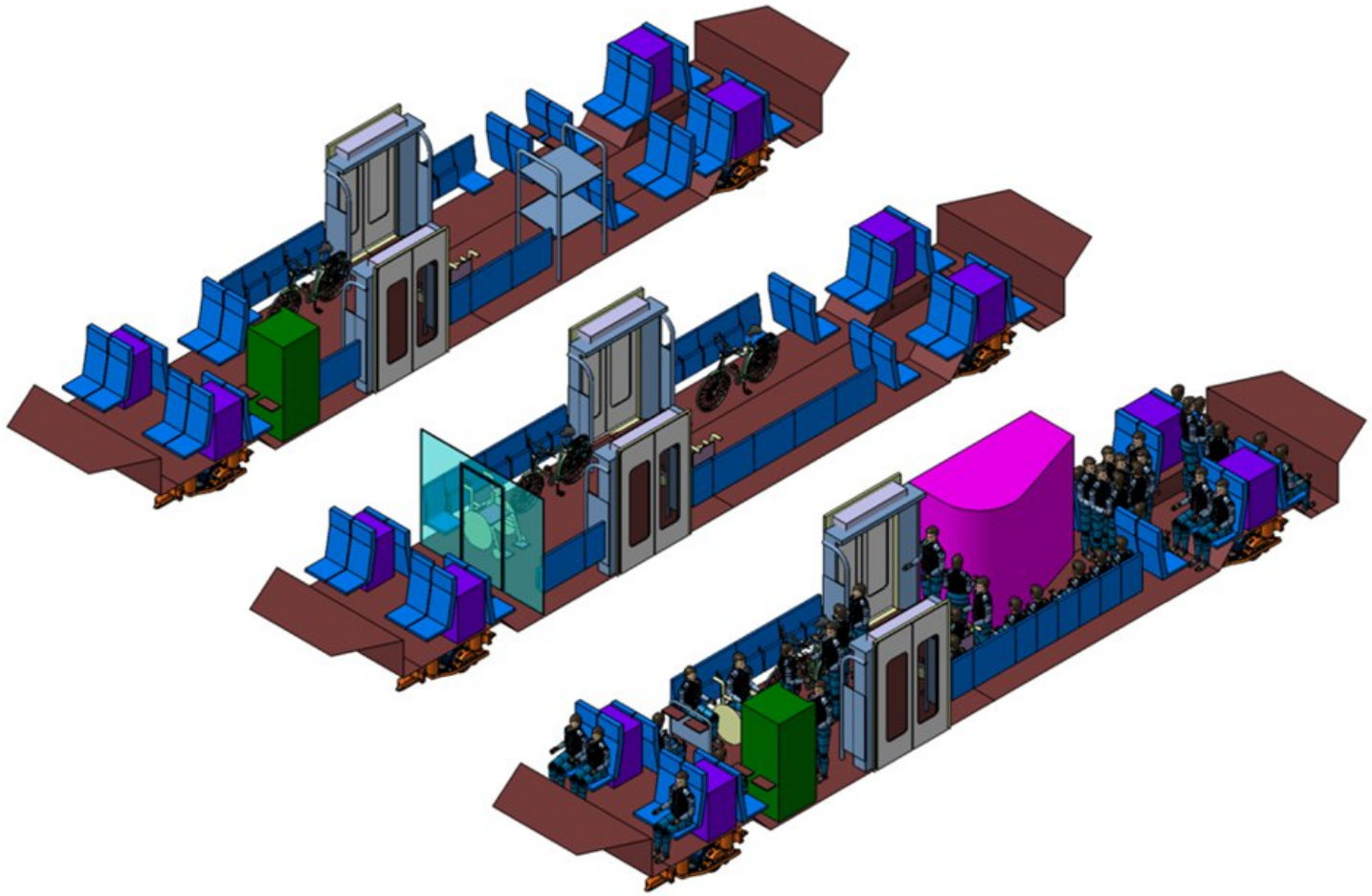



Lightweight carbody

Developing a rail vehicle with low energy use, low cost, and high sustainability requires balancing competing requirements.

The FutuRe project evaluates two carbody concepts in parallel

A topology-optimized welded steel frame, aiming to minimize manufacturing cost while retaining good lightweight performance.

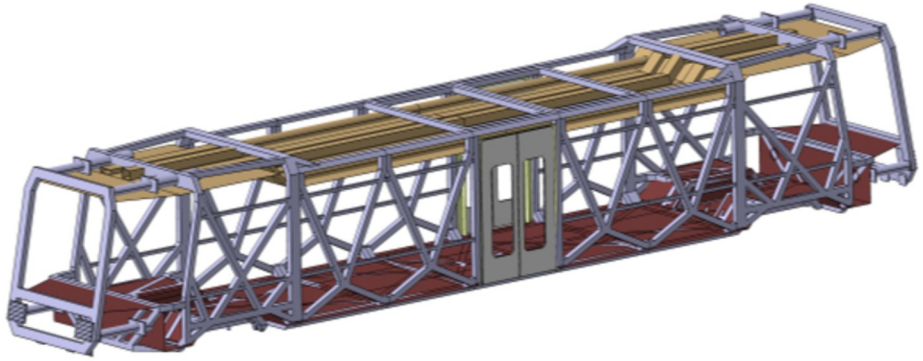

A composite sandwich structure to maximize weight reduction although to a higher manufacturing cost.

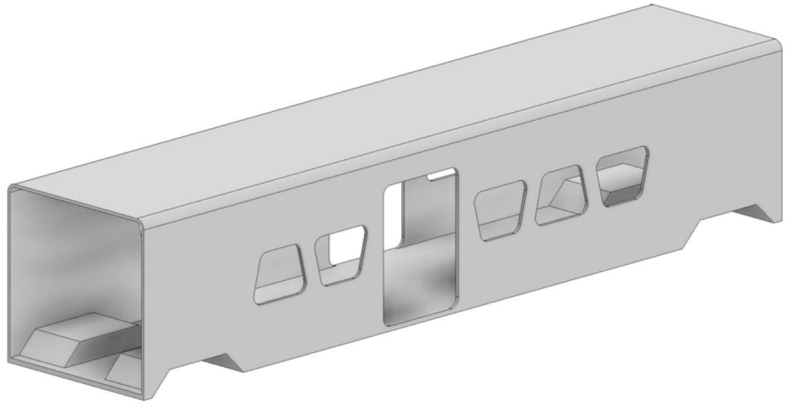

TLP gelb (Adressatenkreis)

Lightweight carbody comparison

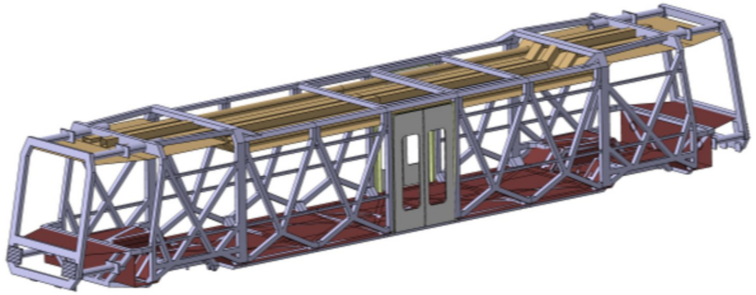

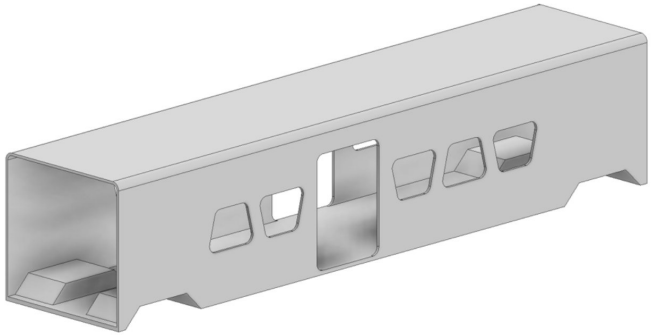

Property	Topology optimized steel carbody	Sandwich composite carbody
Manufacturing	Medium	Complex
Weight	Medium (5 600 kg)	Low
Handling concentrated loads	Good	Poor
Thermal insulation	Poor	Good
Reparability	Good	Complex
Recyclability	Good	Complex

TLP gelb (Adressatenkreis)

Lightweight carbody hybrid

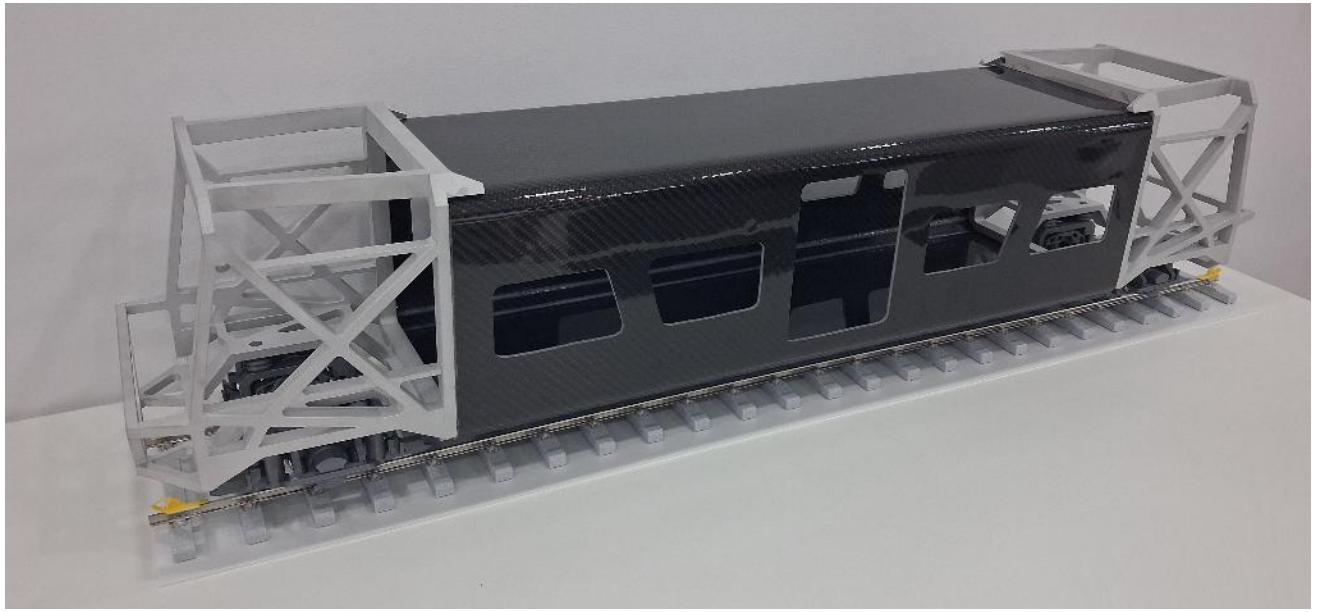

Hybrid carbody, topology optimized steel (ends), sandwich composite (middle)
Displayed at InnoTrans 2026

A hybrid picks the cherries from each concepts, but joining could be an issue.

TLP gelb (Adressatenkreis)

Running gear

A single axle design allows a larger low floor area and is lighter than a bogie

The FutuRe project evaluates two running gear concepts in parallel

Solid axle between the wheels and just one suspension step. Active suspension added to ensure proper performance.

Independently driven wheels allowing the low floor section to extend over the running gear.

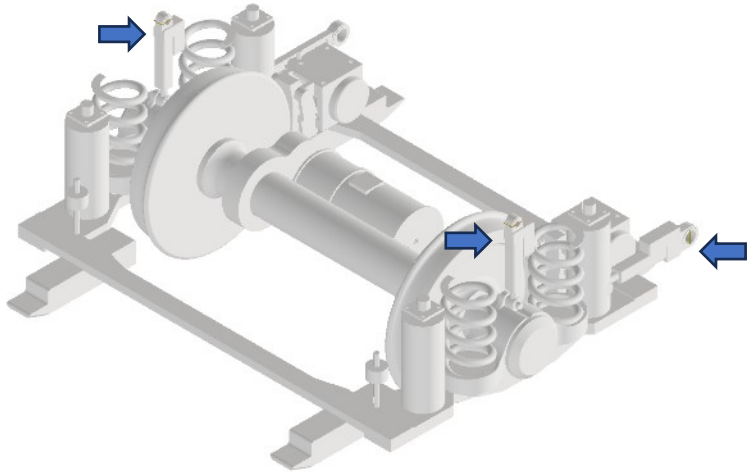

⇦ Active elements replacing passive

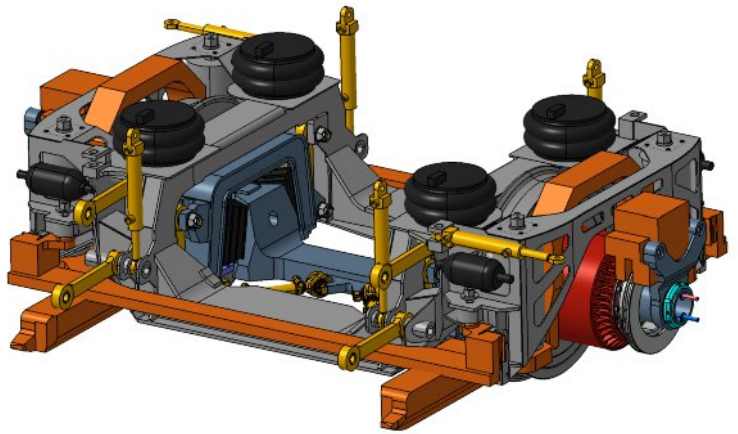

TLP gelb (Adressatenkreis)

Running gear comparison

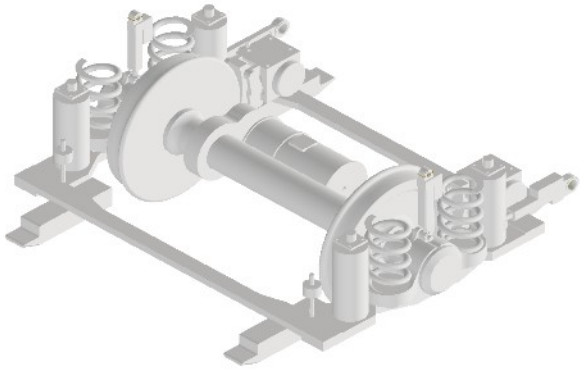

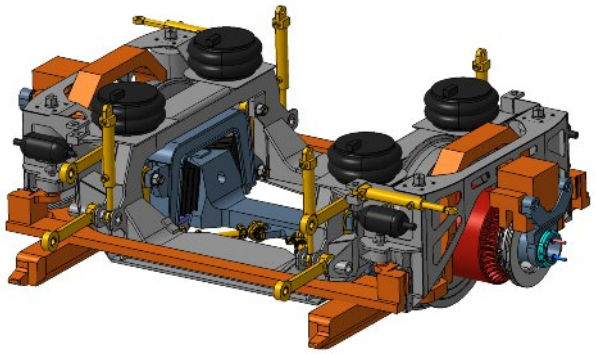

Property	Conventional design	Independently driven rotating wheels	Bogie (reference)
Manufacturing	Simple but active elements needed	Complex	Simple
Weight	2300 kg *)	3300 kg	6000 kg
Suspension step	1 (with active suspension)	2	2
Traction motor	From road suppliers	Dedicated design	Conventional
Support 100% low floor	No	Yes	No
Support compressed air free vehicle	Yes	No	No

*) 2100 kg without track brake

TLP gelb (Adressatenkreis)

Battery propulsion

Most low-density rail lines are not electrified. Therefore, since achieving zero emissions at the vehicle is a prerequisite, batteries have become the preferred energy-storage solution.

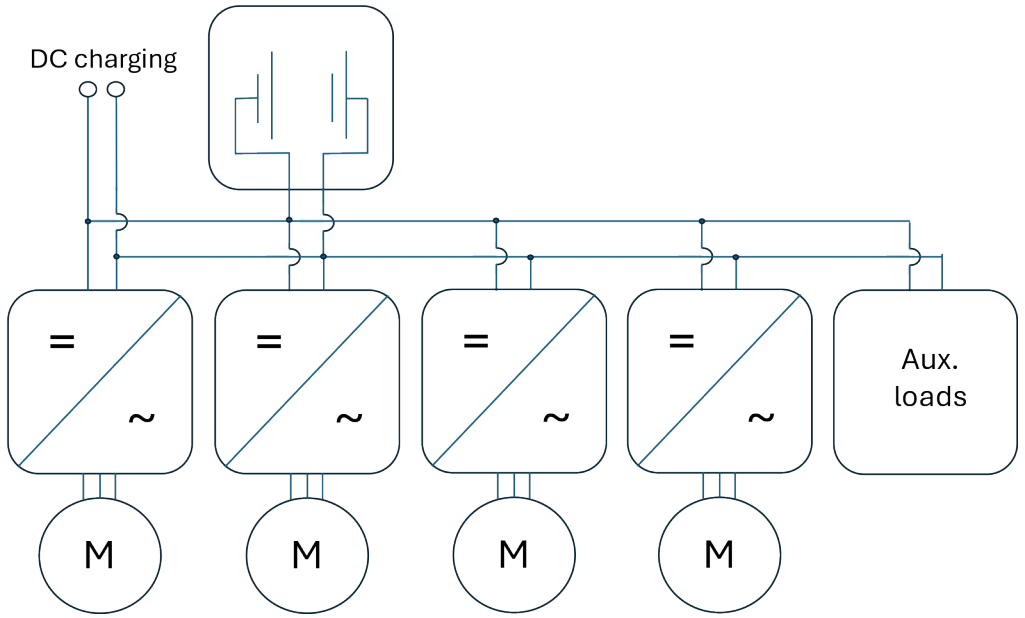

Adopting solutions from road vehicles has the potential to significantly reduce the weight and cost of the propulsion system.

Differentiators from conventional BEMU design

- No charger on the train
- Battery as DC-link (no extra converters)
- Auxiliary loads directly on DC-link (no auxiliary converter)

TLP gelb (Adressatenkreis)

Battery propulsion, options

√ **Battery-electric (LFP** (Lithium Iron Phosphate)**)**

- Range exceeds **300 km** with the maximum installable battery capacity (549 kWh).

√ **Hydrogen hybrid (Fuel cell or combustion engine + LTO** (Lithium Titanate Oxide) **battery)**

- Even longer range possible.
- Hydrogen system reduces available battery space (66 kWh).
- Requires hydrogen refuelling infrastructure.

x **On-board charger (power from catenary)**

- High-voltage equipment reduces available battery space.
- Charging power will be limited due to weight and space.
- Similar, albeit larger, vehicles already exist on the market.

A LFP battery has limited ability to absorb regenerative braking power. Hence, LTO is a better choice when the battery becomes small. The LTO battery is heavier and more expensive.

TLP gelb (Adressatenkreis)

CCS Solutions for Low-Density Railways

The FutuRe project proposes two complementary approaches to reduce signalling costs while ensuring safe railway operations.

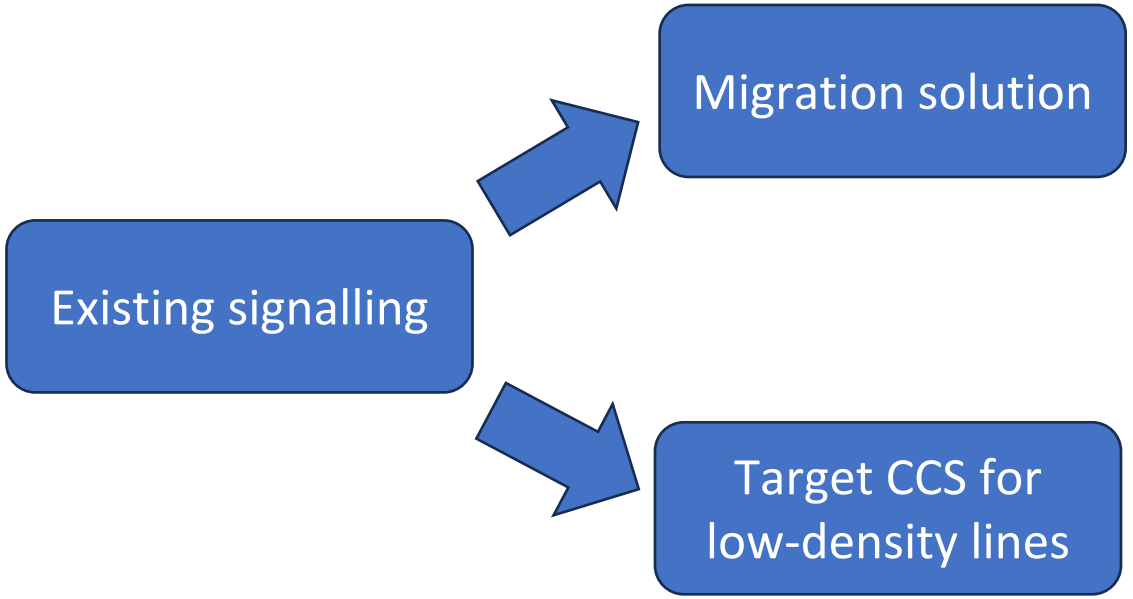

Compatibility with current CCS

Lowest life-cycle cost for low-density lines

TLP gelb (Adressatenkreis)

Solution for CCS migration - VirtuoSig

Trackside: Less Infrastructure

Virtual signalling and train detection

- Replaces conventional lineside signals
- Eliminates the need for track circuits and axle counters
- Block sections and train separation managed digitally through a vital central system combines:
  - Traffic management / dispatching
  - Interlocking functionality

Onboard: Full Compatibility

Digital ATP integrated with existing vehicles

- Digital ATP codes transmitted directly to onboard ATP equipment
- Compatible with legacy ATP systems
- Trains can revert to conventional operation
- Supports gradual migration and mixed-technology operation

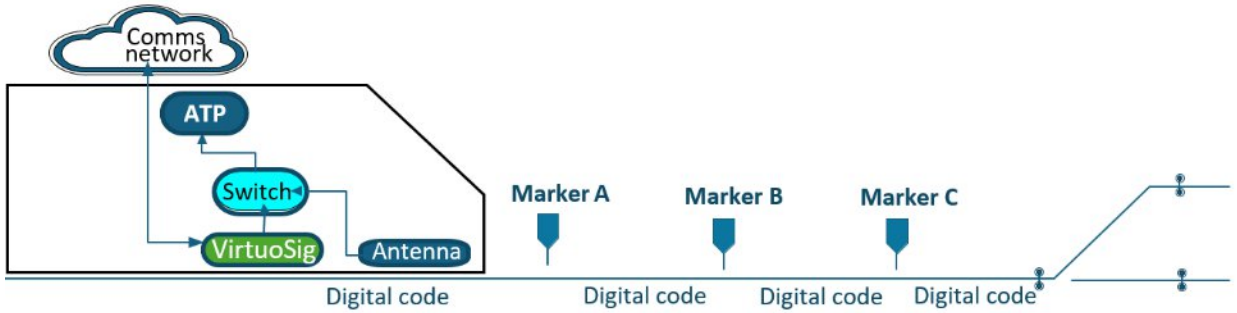

Virtual Signaling:
Fully digital and radio based

VirtuoSig®

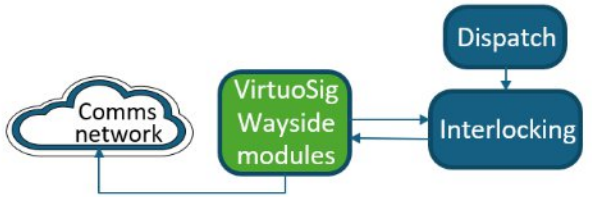

TLP gelb (Adressatenkreis)

Target CCS architecture for low-density lines

A communication-based signalling architecture that eliminates most trackside equipment while enabling future automation and significantly reducing life-cycle costs.

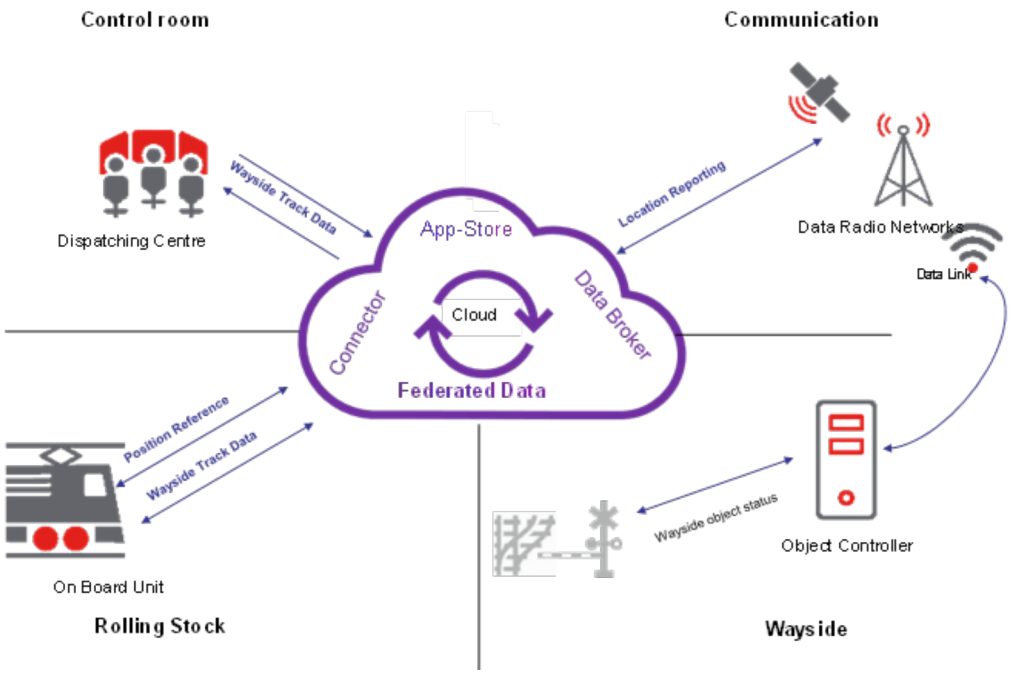

Wireless by Design

- Based on proven **Communication-Based Train Control (CBTC)** principles
- Information exchanged wirelessly between:
  - Traffic control centres
  - Trains
  - Wayside systems
- Uses public or private mobile networks and satellite communications

Connected Data Ecosystem

- Optimises connectivity using the most cost-effective communication channel
- Enables integration with the **EU Federated Data Space**
- Supports scalable digital railway services

TLP gelb (Adressatenkreis)

FP6-FutuRe
Cost effective regional lines

A New Generation of Regional Rail Vehicles and Signalling

Europe's Rail

Lightweight Carbody	Innovative Running Gear
• Topology-optimised steel carbody for low weight and cost • Composite sandwich carbody for even lower weight, but at somewhat higher cost	• Single axle designs for large low floor area • Solid axle concept for low weight and cost • Free rotating wheel concept for step free interior, but a somewhat higher weight
Flexible Zero-Emission Propulsion	**Next-Generation Signalling**
• Battery-electric as the baseline solution • Option for hydrogen energy source to extend range, but to a higher cost • Use of proven electric road vehicle technologies	• Satellite and radio-based train control • Minimal trackside infrastructure • Ready for future automation • Migration solution compatible with existing train protection systems

TLP gelb (Adressatenkreis)

Acknowledgement

Funded by the European Union. Views and opinion expressed are however those of the author(s) only and do not necessarily reflect those of the European Union or the Europe’s Rail Joint Undertaking. Neither the European Union nor the granting authority can be held responsible for them. The Flagship project 6 FutuRe is supported by the Europe’s Rail Joint Undertaking and its members

TLP gelb (Adressatenkreis)